PRO LIFT
CRANE & HOIST

# WORKSTATION BRIDGE CRANES & MONORAILS

met-track®





# WORKSTATION BRIDGE CRANES

From standard workstation kits to complex materials handling systems, the **met-track®** range of cranes, monorails and conveyors provides effortless and reliable area-serving overhead handling. Each system is configured with the operator in mind and includes the principle feature of ease of movement, designed to reduce fatigue and ensure accurate load positioning. Our range includes both ceiling and floor mounted workstation bridge cranes, monorails and conveyors.

### ERGONOMIC OPERATION

The enclosed track profiles of the **met-track®** make for an ergonomic design with only 1% of the load needed to move the suspended work piece and up to three times easier to move than traditional bridge cranes. The steel track design is one of high strength and low weight by combining the running track profile with a variety of reinforcements to considerably increase span distances. The 'V' shaped profile of the running track ensures alignment of the trolleys and end truck and prevents dirt accumulation inside the tracks. Machined wheels with crowned tread and precision sealed bearings ensure absolute minimum rolling resistance and provide long operational life.

### SPECIAL DESIGNED SOLUTIONS

As a supplier of major materials handling projects worldwide, we are well experienced in dealing with turnkey installations where standard handling systems are not considered ideal. We believe that providing the customer with all the required systems configured exactly to their needs is essential to ensure the installed project is 'fit for purpose'.

### MODULAR DESIGN

The **met-track®** pre-engineered modular design allows for easy relocation and/or expansion by simply adding runway sections and/or additional bridges. Splice joints connect the track sections and are complete with vertical and horizontal adjustment screws, facilitating precise alignment of the track sections. Floor mounted systems can be installed on any normal 6" reinforced concrete floor. For ceiling mounted cranes it is imperative that you seek professional advice on whether your building structure is capable of withstanding the forces generated by the workstation system.

### FEATURES

- Loads up to 4000#
- Bridge lengths up to 32'
- Runway supports up to 30'
- Ceiling & Floor Mount Options
- Modular Design
- Simple to install and extend
- Low cost
- Mixed capacity systems
- Motorised tractor units
- Telescopic bridges
- Cantilever bridges
- Track transfer units

# BASIC CRANE STRUCTURE

The **met-track®** crane system consists of bridges, runways, runway joint kits, end trucks, hoists trolleys and end bolts. These basic components can then be supported by standard floor mounted structures, ceiling mounted assemblies or special arrangements according to the application requirements. In addition it is typical for powering the lifting device that festoons or conductor systems are fitted.

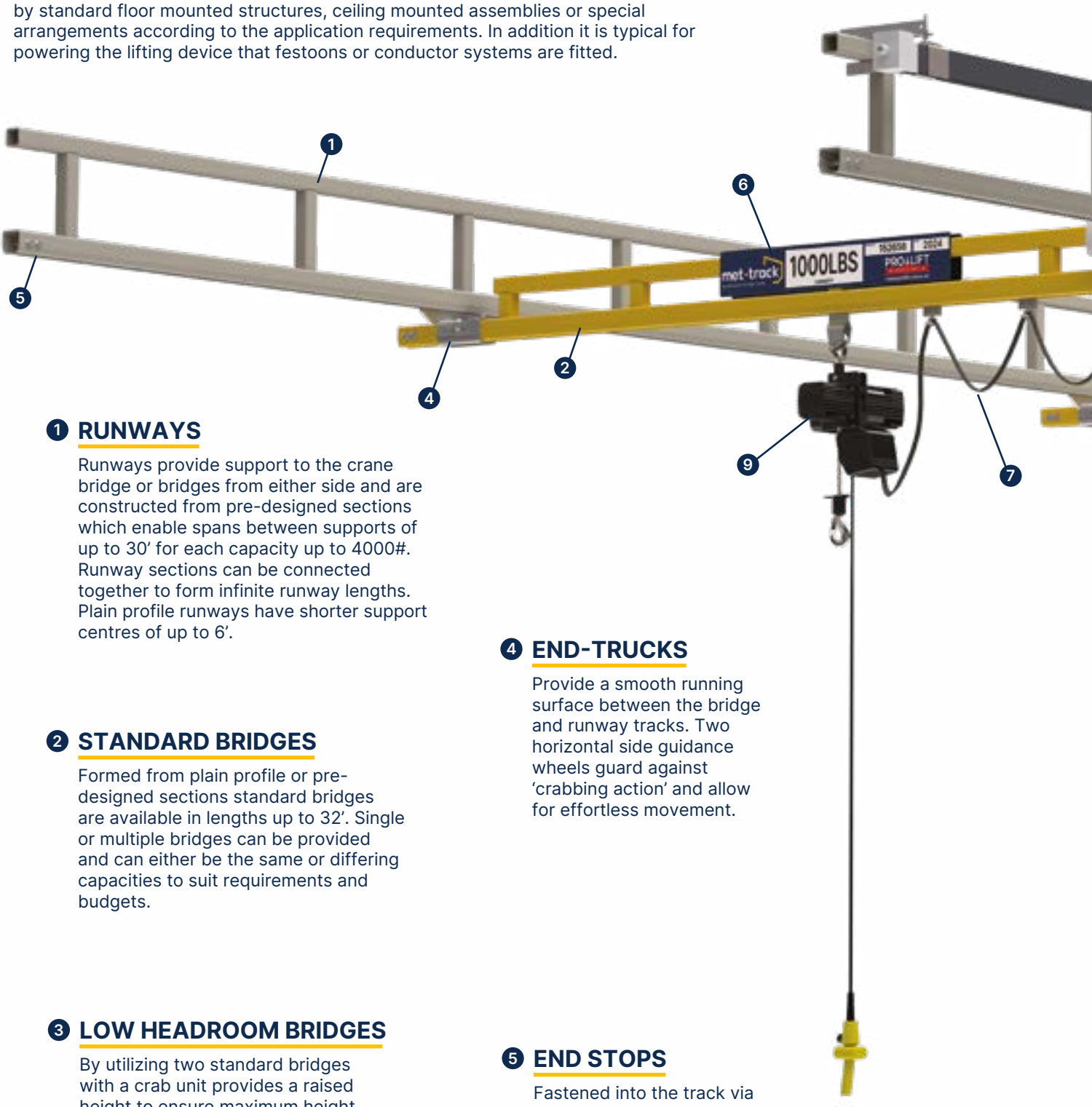


## 1 RUNWAYS

Runways provide support to the crane bridge or bridges from either side and are constructed from pre-designed sections which enable spans between supports of up to 30’ for each capacity up to 4000#. Runway sections can be connected together to form infinite runway lengths. Plain profile runways have shorter support centres of up to 6’.

## 2 STANDARD BRIDGES

Formed from plain profile or pre-designed sections standard bridges are available in lengths up to 32’. Single or multiple bridges can be provided and can either be the same or differing capacities to suit requirements and budgets.

## 3 LOW HEADROOM BRIDGES

By utilizing two standard bridges with a crab unit provides a raised height to ensure maximum height of lift for applications where low headroom is a problem.

## 4 END-TRUCKS

Provide a smooth running surface between the bridge and runway tracks. Two horizontal side guidance wheels guard against ‘crabbing action’ and allow for effortless movement.

## 5 END STOPS

Fastened into the track via through bolt the resilient rubber bumper helps absorb the impact forces at the track ends.

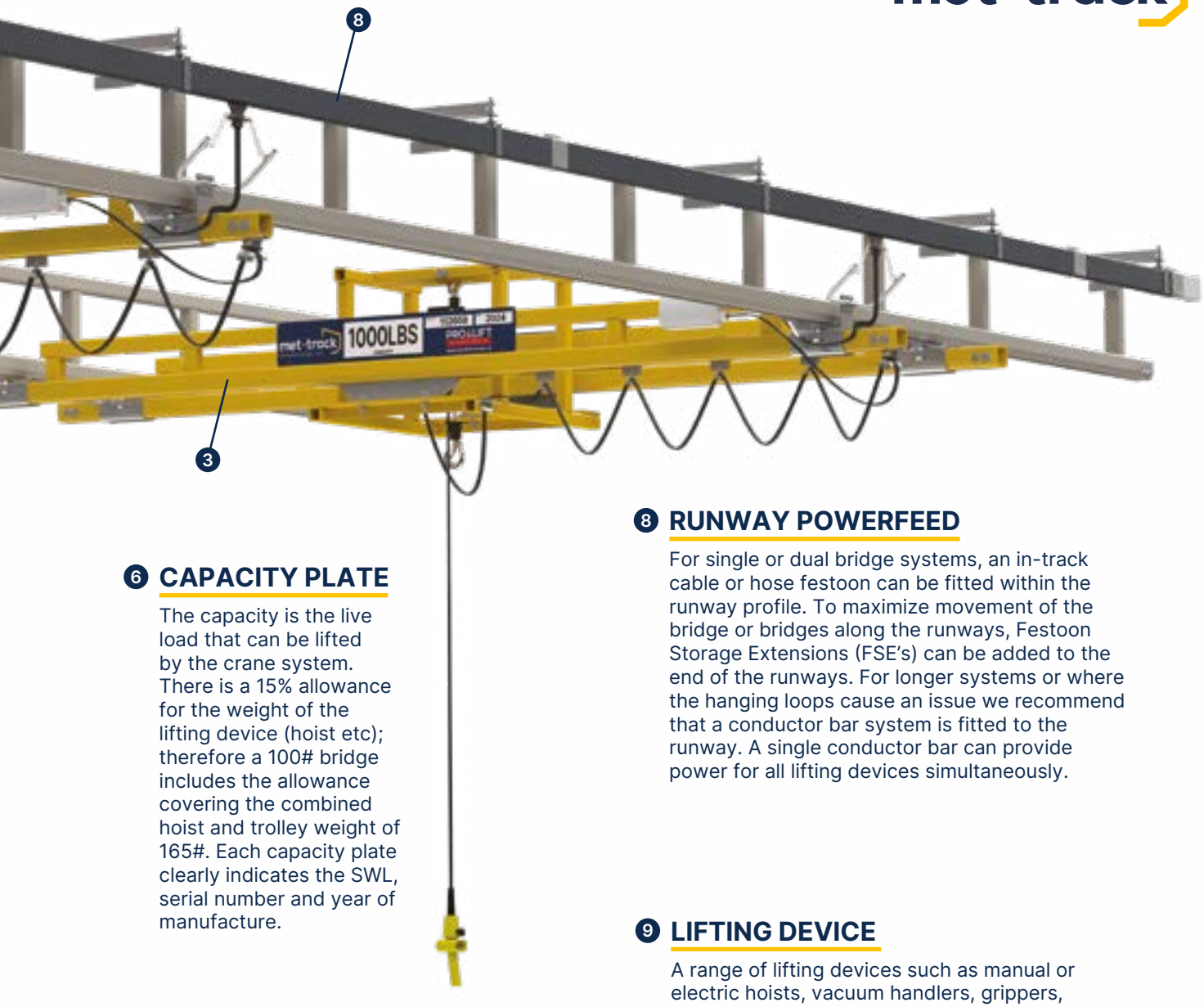


## 6 CAPACITY PLATE

The capacity is the live load that can be lifted by the crane system. There is a 15% allowance for the weight of the lifting device (hoist etc); therefore a 100# bridge includes the allowance covering the combined hoist and trolley weight of 165#. Each capacity plate clearly indicates the SWL, serial number and year of manufacture.

## 7 BRIDGE POWERFEED

Typically a simple festoon system utilizing a range of trolleys running inside the crane bridge track, supporting round or flat cables and hoses. The festoon trolleys stack up at one end of the bridge and can limit the travel of the hoist, if travel needs to be maximized an optional conductor system can be supplied.

## 8 RUNWAY POWERFEED

For single or dual bridge systems, an in-track cable or hose festoon can be fitted within the runway profile. To maximize movement of the bridge or bridges along the runways, Festoon Storage Extensions (FSE's) can be added to the end of the runways. For longer systems or where the hanging loops cause an issue we recommend that a conductor bar system is fitted to the runway. A single conductor bar can provide power for all lifting devices simultaneously.

## 9 LIFTING DEVICE

A range of lifting devices such as manual or electric hoists, vacuum handlers, grippers, manipulators and much more can be suspended from our crane systems. If required we offer the ability to integrate the control systems in conjunction with the crane movements utilizing our in house design team.

## DUTY

Operational time up to 100% of the work period and loads being lifted up to 50% of the rated capacity or operational less than 50% of the work period and loads being lifted are greater than 50% of the rated capacity.




PRO LIFT
CRANE & HOIST

met-track

# FLOOR MOUNTED

Floor mounted systems are not a permanent part of your building structure and can be easily relocated to accommodate future changes in your production facility. The installation is often much simpler and does not apply stresses to the building roof structure.

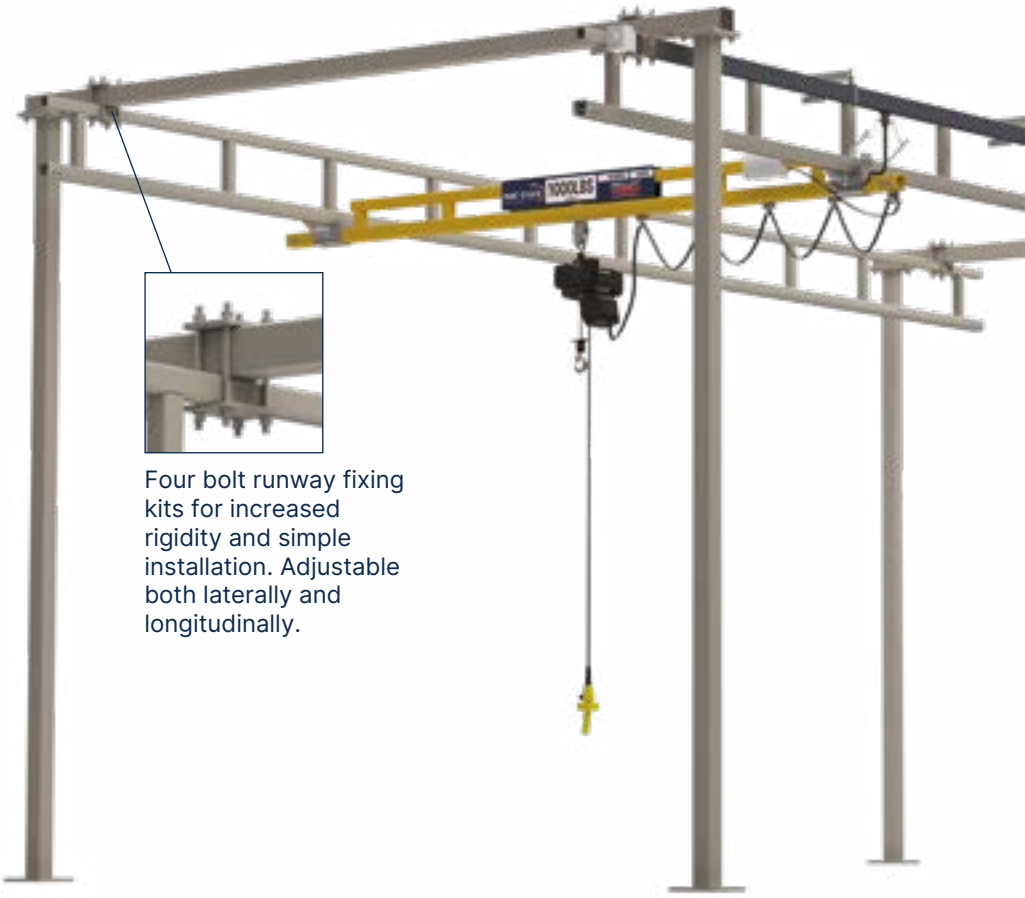




Four bolt runway fixing kits for increased rigidity and simple installation. Adjustable both laterally and longitudinally.

# CEILING MOUNT

Ceiling mount systems are ideal when floor space is limited or access by other equipment is required where floor support steels would normally be placed.

A wide variety of mounting backets are available to suit your application. Some of the most popular are shown below.

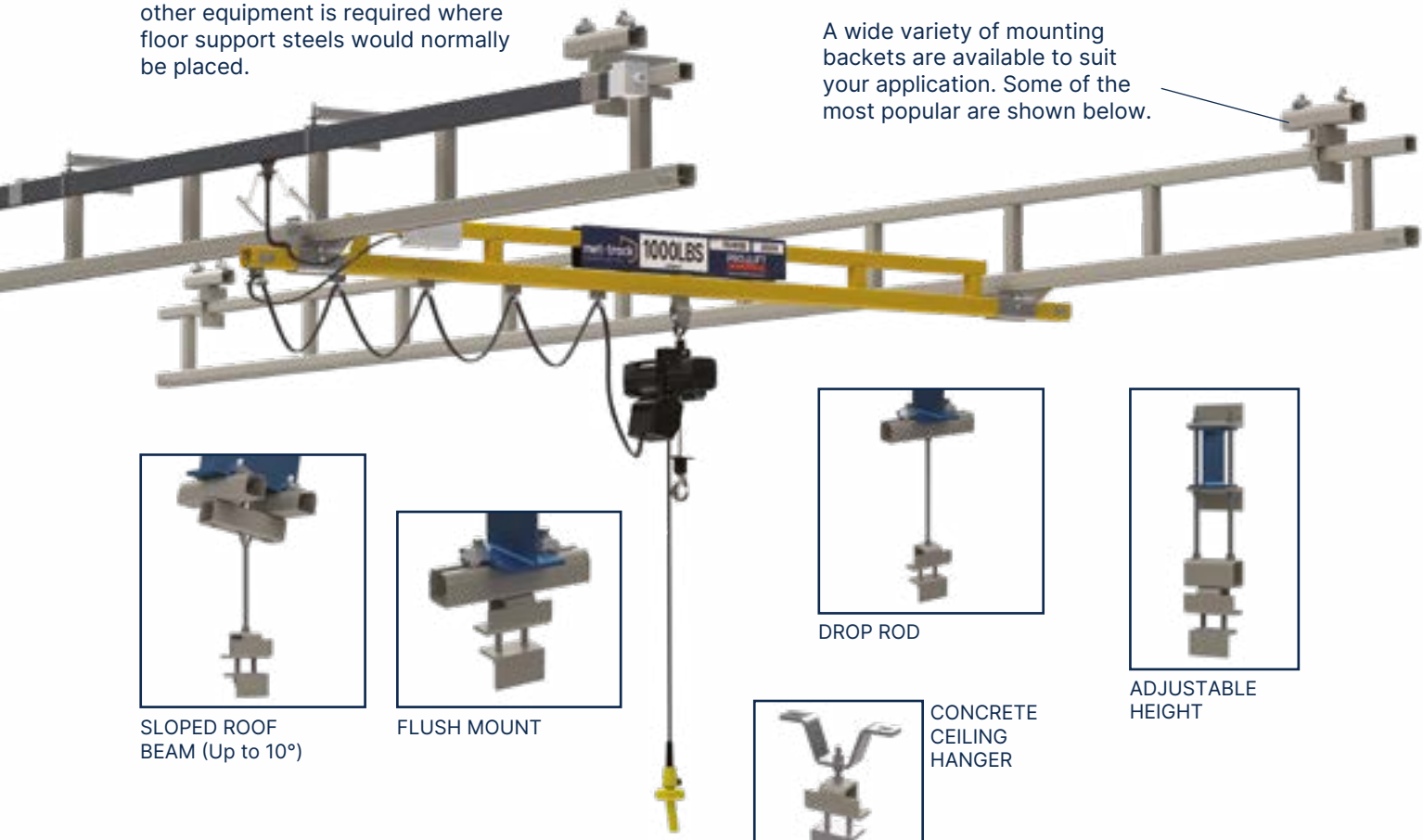




SLOPED ROOF BEAM (Up to 10°)



FLUSH MOUNT



DROP ROD



ADJUSTABLE HEIGHT



CONCRETE CEILING HANGER

# PLAIN PROFILE LIGHT CRANES

The **met-track®** range of plain profile light cranes is ideal for situations where structural beams exist. Four profile sizes offer capacities up to 2000# and can be mounted to almost any structure from the vast range of hangers available.




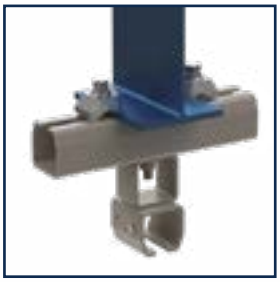

FLUSH MOUNT



CONCRETE CEILING HANGER



DROP ROD



ADJUSTABLE HEIGHT



SLOPED ROOF BEAM (Up to 10°)

# BRIDGE & RUNWAY STYLES

To achieve the desired span distances, bridges and runways are designed as simple running track only or by combining the running track with either a flat plate or trussed spine.

| Plain Track - No Spine | Flat Plate Spine | Trussed Spine |
|---|---|---|
|  |  |  |
|  |  |  |

# END TRUCKS

End trucks provide a smooth running connection between the bridge and runway tracks, the horizontal side guidance wheels guard against crabbing action. Standard end trucks are used for bridges up to 20', extended end trucks give extra crabbing resistance for the longer bridges. Mixed capacity are used when the bridge is a smaller capacity than the runway, typically where more than one bridge is installed on a pair of runways.

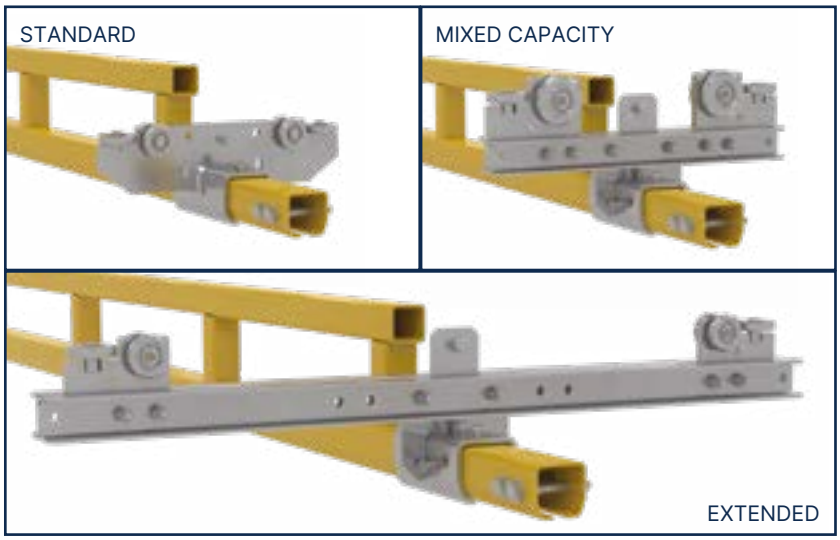


# POWERFEEDS




**ALL FESTOON SUPPLY ◀**
Power to the lifting device, if required, is supplied via a cable or hose festoon on both the runway and bridge, the festoon trolleys run in the track profile and stack up at the feed end. The space required for the festoon trolley storage can minimize the active travel required.

**CONDUCTORS ▼**
To provide the maximum travel available for the bridge, the use of our 4-Ductor Conductor Bar system is the ideal solution. This is also ideal where the festoon loops prevent clear access for other equipment required in the work area. This simple solution offers no resistance to the ease of movement due to the design of the collector trolley brushes and jointless conductors. The 4-Ductor Conductor Bar can also be installed on the bridge(s).






**▲ FESTOON STORAGE EXTENSION**
By using a standard festoon extension section on the runway, it is possible to make use of the maximum travel length of the runways, rather than extending the whole runways support just to cater for the festoon storage requirement.

PRO LIFT CRANE & HOIST

met-track

# ADDITIONAL OPTIONS

Improving end use suitability is key for the **met-track®** product and as such we offer a range of options that enhance the overall functionality and provide trusted solutions tailored to your needs.

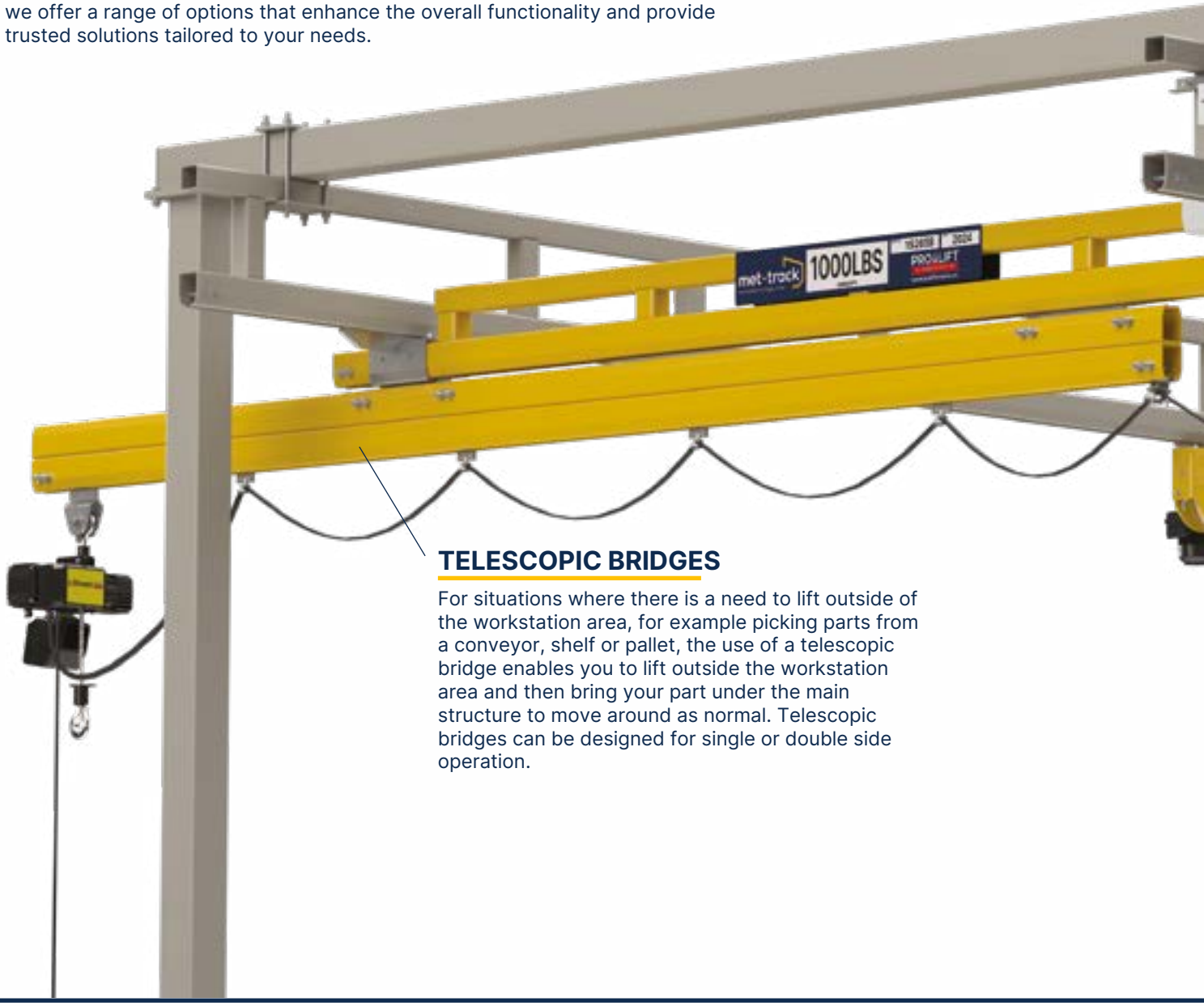


## TELESCOPIC BRIDGES

For situations where there is a need to lift outside of the workstation area, for example picking parts from a conveyor, shelf or pallet, the use of a telescopic bridge enables you to lift outside the workstation area and then bring your part under the main structure to move around as normal. Telescopic bridges can be designed for single or double side operation.

## BRIDGE BUFFERS

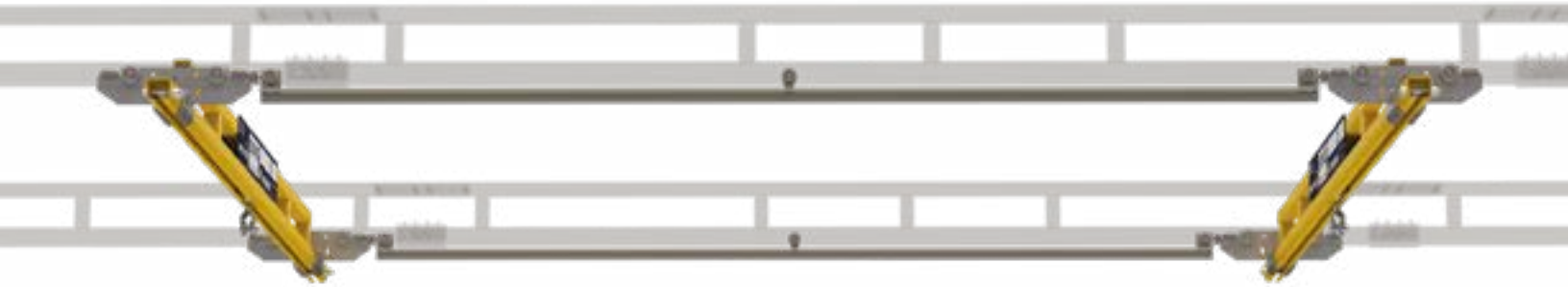

Bridge buffers are suspended from two trolleys in the runway to create a predetermined minimum distance the bridges can operate from each other. These are utilized when there are multiple bridges with capacity exceeding that of the runway collectively. Half span or full span buffers can be deployed depending upon your application.




## POWERED DRIVES

Powered drives are available for either the hoist travel, bridge travel or both and are ideal for heavier loads or where loads require precise positioning.

All our drive packages offer:

- 460/3/60 or 575/3/60 volt
- Variable speed drive (VFD) controller with soft start and soft stop.
- Travel speeds variable from 32′/fpm to 115′/fpm
- Mainline 110-volt control
- Control via Pushbutton or Radio Remote
- Thermal overload protection.

As standard the control package comes as pendant control wired to the hoist drive unit, although auxiliary powerfeeds are available keeping the pendant separate from the hoists for easier access. We also offer a complete radio remote control option for the ultimate control solution.




PRO LIFT
CRANE & HOIST

met-track®

# MONORAILS & CONVEYORS

The **met-track®** overhead monorail and conveyor systems can easily be adapted to suit your specific application requirements due to the large range of standard components available, which include curves, latches, switches, turntables, entrance/exit sections, brake devices and drop/lift and transfer sections.

With capacities up to 4000# the selection of components and the choice of 4 track profiles are important factors for ensuring efficient/low cost designs to suit customer requirements.

The **met-track®** overhead monorail and conveyor systems are designed for manual operation however, when required a power and free system can be achieved by the addition of a motorized chain system or tug drives.

The modular format with the bolted connections ensures quick installation and easy modification.

Our overhead monorails and conveyors can be easily integrated with workstation cranes utilizing standard track transfer units.



# MONORAILS & CONVEYORS

## TRACK TRANSFERS

Designed to provide a safe, efficient and easy to operate transfer of a load trolley from the bridge to an adjacent bridge or monorail system. Switches can be operated using pull chains, as shown, or using pneumatic actuators.

## TURNKEY SOLUTIONS

By utilizing many of the features, such as turntables, switches, bends etc. Prolift Crane & Hoist can develop turnkey packages to include all floor or ceiling mounted steelwork. From tyre remould facilities to process finishing plants the met-track conveyor systems can be configured to suit your environment.

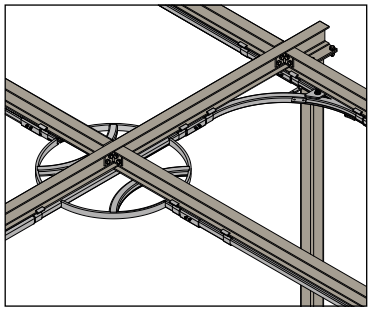

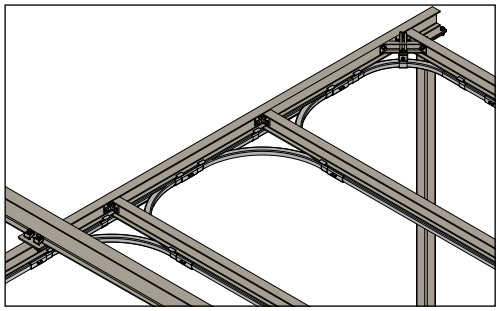

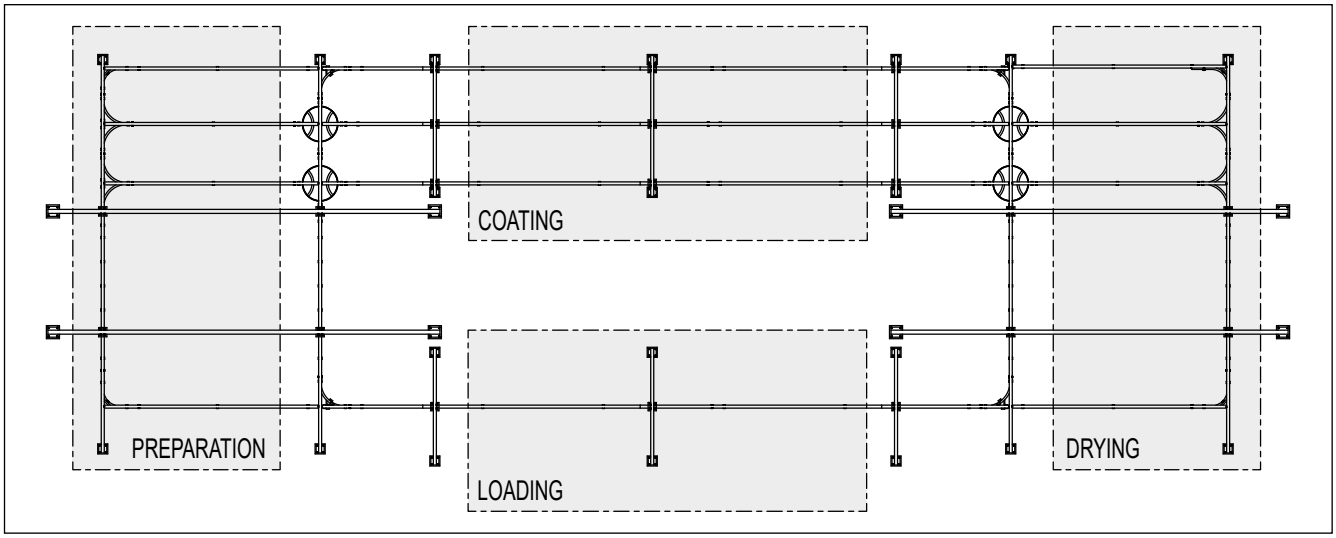

PRO LIFT
CRANE & HOIST

met-track®





## POWER & FREE

A power and free facility can be achieved by incorporating a supplementary drive system or simply adding a powered section where the lifting operation is required.

Here 2 bays are serviced by the same hoist unit with a conductor and transfers fitted in the local work area.

PRO LIFT

CRANE & HOIST

www.proliftcranes.ca

PB019-1024