OZ LIFTING® PRODUCTS

PASSION • INNOVATION • TRADITION

OZ PREMIUM | OZ INDUSTRIAL | OZ STAINLESS SERIES | OZ ELECTRIC SERIES

OZ SPARK RESISTANT SERIES | FALL PROTECTION | OZ DYNO-HOIST

TELE-PRO | COMPOZITE | COMPOZITE-ELITE | OZ STEEL DAVIT



800.749.1064
ozliftingproducts.com

Rev. 01/16/22

OZ LIFTING PRODUCTS®



OBH1000

OZ Lifting Products®, LLC is headquartered and warehoused in Winona, Minnesota. We have a long standing dedication to excellent customer service and support. We are committed to designing and manufacturing high quality and long lasting lifting products and solutions. Our lifting equipment has been successfully handling material globally for years. We serve many industries including oil, gas, automotive, aviation, construction and mining. Our products have provided safe lifting solutions in demanding applications for over 17 years.

MEMBERSHIPS

AWRF Associated Wire Rope Fabricators
MHI Material Handling Institute
NFIB National Federation of Independent Business
NSC National Safety Council
WEF Water Environment Federation
WSTDA Web Sling and Tie Down Association
WACC Winona Area Chamber of Commerce

CONFORMITY & SAFETY STANDARDS

ANSI American National Standards Institute
AS Standards Australia
ASME American Society of Mechanical Engineers
CE Conformité Européenne
OSHA Occupational Safety and Health Administration

PRODUCT INDEX

- Premium Lever Hoist . . . . . .Pg. 4
- Premium Chain Hoist . . . . . .Pg. 6
- Industrial Lever Hoist . . . . . .Pg. 8
- Industrial Chain Hoist . . . . . .Pg. 9
- Stainless Chain Hoist . . . . . .Pg. 10
- Stainless Beam Clamp & Trolley . . . .Pg. 11
- Spark Resistant Chain Hoist . . . . . .Pg. 12
- Spark Resistant Beam Trolley. . . . . .Pg. 13
- Dyno-Hoist Lever Hoist . . . . . .Pg. 14
- Fall Protection USA Clamp & Trolley Pg. 15
- USA Beam Clamp & Trolley. . . . . .Pg. 16
- Beam Clamp & Trolleys . . . . . .Pg. 17
- Quick Adjust Trolley . . . . . .Pg. 18
- Geared Beam Trolley. . . . . .Pg. 19
- Electric Chain Hoist . . . . . .Pg. 20
- Electric Wire Rope Hoist . . . . . .Pg. 22
- Manual Winches . . . . . .Pg. 24
- Electric Winches . . . . . .Pg. 25
- Tele-Pro® Davit Crane . . . . . .Pg. 26
- CompOZite® Davit Crane. . . . . .Pg. 28
- Steel Davit Crane. . . . . .Pg. 30
- CompOZite Elite® Davit Crane. . . . .Pg. 32
- Davit Crane Application Sheet . . . .Pg. 33

WHY OZ LIFTING PRODUCTS®?

Service
From the first phone call to service after the sale, we carefully manage all aspects of your order. Our standard product can be quoted immediately with most orders shipping same day. We get you the product you need, when you need it. Customer satisfaction is our number one priority. Our team is committed to providing you the service you deserve.

No Order Minimums
No required minimum quantity orders.

Quick Ship
Our quick ship program contains our most common items, many of which are used in the building and construction industries where quick turnaround solutions are required. These items ship in 2 business days at the most with many items available to ship the same day. Our most popular pre-configured products ship same-day if ordered before 12:00pm CST Monday-Friday.

Made in the USA
We offer a full range of new and innovative lifting products designed and manufactured in the United States.

Tested in the USA
At OZ Lifting Products®, our customers expect products that have endured advanced testing and rigorous inspection to ensure many years of operation. Our quality control and testing is unmatched. Our products meet and exceed expectations in regards to safety, performance, durability and customer satisfaction. Our products adhere to the ASME, ANSI, AS, OSHA and CE standards keeping you and your equipment safe.

Test Certificate
A test certificate is included with each product and ensures the product has been load tested. An individual serial number provides complete traceability throughout the manufacturing process.

Overload Protected
Our overload protection is standard on all of our premium hoists and select electric series models. The overload protection is integral to the product and prevents the operator from overloading the hoist. The overload resets itself and the hoist can go right back into service. Every product featuring overload is tested at our facility in Minnesota by certified OZ technicians to guarantee product performance.

Custom Length of Lift
We offer custom lengths of lifts on all of our products. Standard or custom length, we have a solution.

Parts
Replacement parts available.

Patented **Trademark** **Warranty**

LEVER HOIST

OZ PREMIUM
OVERLOAD PROTECTED

Features

Standard Overload Protection – Overload device is set at approximately 150% of the rated load. This feature prevents the hoist from being severely overloaded causing damage to the hoist.

Free Wheel Feature – When not under load, the operator can disengage the gearing by positioning the selection switch to the center position. This allows for a quick adjustment of chain for faster operation.

Lifting or Pulling – Can be used for lifting or pulling which makes it a more versatile tool.

Minimal Load Lifting Effort – Double reduction gearing provides easy operation with minimal lifting effort.

360-Degree Handle Rotation – Allows the operator to work in confined spaces.

All-Steel Construction – Featuring a long lasting powder coat finish, the all-steel construction ensures durable protection while providing a long and dependable service life in harsh environments.

Weston-Style Brake System – An enclosed and protected Weston-Style load brake stays clean and dry during the entire load operation. Also equipped with a unique twin pawl design for additional reliability.

Enclosed Gearing – Gears are protected from contamination and debris.

Fully-Enclosed Lift Wheel – Maintains smooth operation while distributing the load over more links of chain. It also helps keep debris from contaminating the lift wheel and self-cleans the chain as it enters the wheel.

Sealed Roller Bearing – This feature provides smooth, controlled operation of the gears and shafts. This ensures maintenance-free lubrication.

Steel Handle with Rubber Grip – Provides a non-slip, sure-grip surface.

Forged Hooks – Forged alloy steel hooks swivel 360° for easier attachment and positioning.

Cast steel safety latches – Heavy-duty, cast-steel safety latch has a bolt-and-lock nut connection. This feature simplifies changing latches in the field.

100% load tested Zinc-Plated Chain – Provides a durable non-oily finish.

Stainless Steel Riveted ID Tags – Made from stainless steel the ID tag is corrosion resistant.

Maintenance – Hoists can be quickly disassembled for fast and easy maintenance. See the videos and maintenance breakdown animations at OZLiftingProducts.com.

5, 10, 15 & 20FT Standard Lengths of Lift. Custom lengths available upon request.

Safety Hooks & Shipyard Hooks available for 1.5 and 3 Ton Lever Hoists

Standards – CE, ASME B30.21, AS1418.2



OZ075-10LHOP

FREE SPARE SET OF LATCHES

YouTube

TESTED USA

WARNING
CANCER AND REPRODUCTIVE HARM
Some products may contain chemicals known to the state of California to cause cancer, or birth defect or reproductive harm.
www.P65Warning.ca.gov

.75, 1.5, 3 T

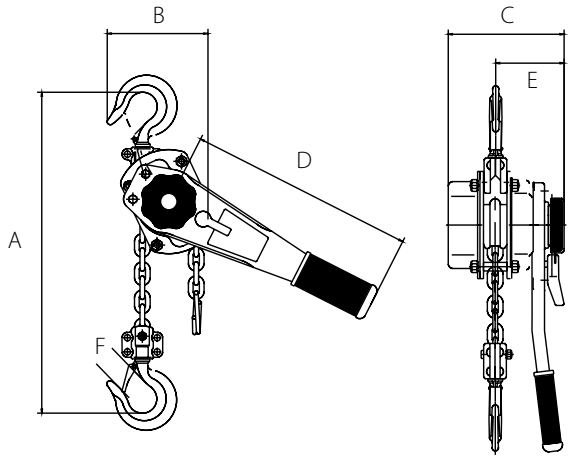

6 T

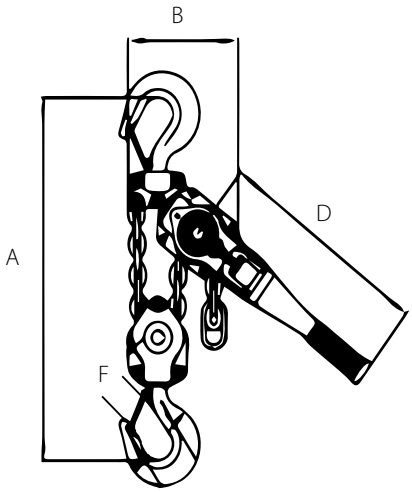

9 T

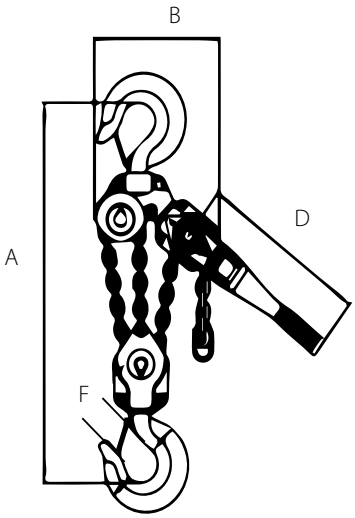



OZ600-15LHOP

		OZ075-XXLHOP	OZ150-XXLHOP	OZ300-XXLHOP	OZ600-XXLHOP	OZ900-XXLHOP
Capacity (tons)		0.75	1.5	3	6	9
Headroom (in)		12.79	14.96	18.90	24.41	27.56
Effort on lever to lift full load (lbs)		30.86	48.50	70.55	74.96	79.37
Falls of Chain		1	1	1	2	3
Diameter of Load Chain (mm)		6	8	10	10	10
Length of Lever Handle (in)		11.02	16.14	16.14	16.14	16.14
Dimensional Information (in)	A	12.79	14.96	18.89	24.40	27.55
	B	5.35	6.29	7.08	9.25	12.44
	C	5.82	6.77	7.87	7.87	7.87
	D	11.02	16.14	16.14	16.14	16.14
	E	3.54	3.85	4.52	4.52	4.52
Hook-opening, Upper & Lower (in)	F	1.18	1.41	1.57	1.96	2.28
Net Weight of Head Only (lbs)		13	22	33	51	81

Standard Lift Lengths: 5,10,15, and 20 ft.

We also do custom rigging

Dimensions & illustrations are for reference only and subject to change without notice.
XX in hoist model number indicates length of lift by foot.

WARNING
CANCER AND REPRODUCTIVE HARM
Some products may contain chemicals known to the state of California to cause cancer, or birth defect or reproductive harm.
www.P65Warning.ca.gov

CHAIN HOIST

OZ PREMIUM
OVERLOAD PROTECTED

Features

Standard Overload Protection – Overload device is set at approximately 150% of the rated load. This feature prevents the hoist from being severely overloaded causing damage to the hoist.

Lifting or Pulling – Can be used for lifting or pulling which makes it a more versatile tool.

Minimal Load Lifting Effort – Double reduction gearing provides easy operation with minimal lifting effort.

Unique Hand Wheel Design – This feature enables the hand chain to successfully feed directly into the wheel sprocket from many directions and angles. Thus, the operator can use the hoist while standing to the side of, or even above the load without fear of the hand chain jamming.

All-Steel Construction – Featuring a long lasting powder coat finish, the all-steel construction ensures durable protection while providing a long and dependable service life in harsh environments.

Weston-Style Brake System – An enclosed and protected Weston-Style load brake stays clean and dry during the entire load operation. Also equipped with a unique twin pawl design for additional reliability.

Enclosed Gearing – Gears are protected from contamination and debris.

Sealed Roller Bearing – This feature provides smooth, controlled operation of the gears and shafts. This ensures maintenance-free lubrication.

Forged Hooks – Forged alloy steel hooks swivel 360° for easier attachment and positioning.

Thrust Bearing on Lower Hook – Allows easy rotation of load while suspended and prevents load chain twisting.

Cast steel safety latches – Heavy-duty, cast-steel safety latch has a bolt-and-lock nut connection. This feature simplifies changing latches in the field.

100% load tested Zinc-Plated Chain – Provides a durable non-oily finish.

Stainless Steel Riveted ID Tags – Made from stainless steel the ID tag is corrosion resistant.

Maintenance – Hoists can be quickly disassembled for fast and easy maintenance. See the videos and maintenance breakdown animations at OZLiftingProducts.com.

5, 10, 15 & 20FT Standard Lengths of Lift. Custom lengths available upon request.

Standards – CE, ASME B30.16, AS1418.2

OVERLOAD PROTECTED

OZ020-10CHOP

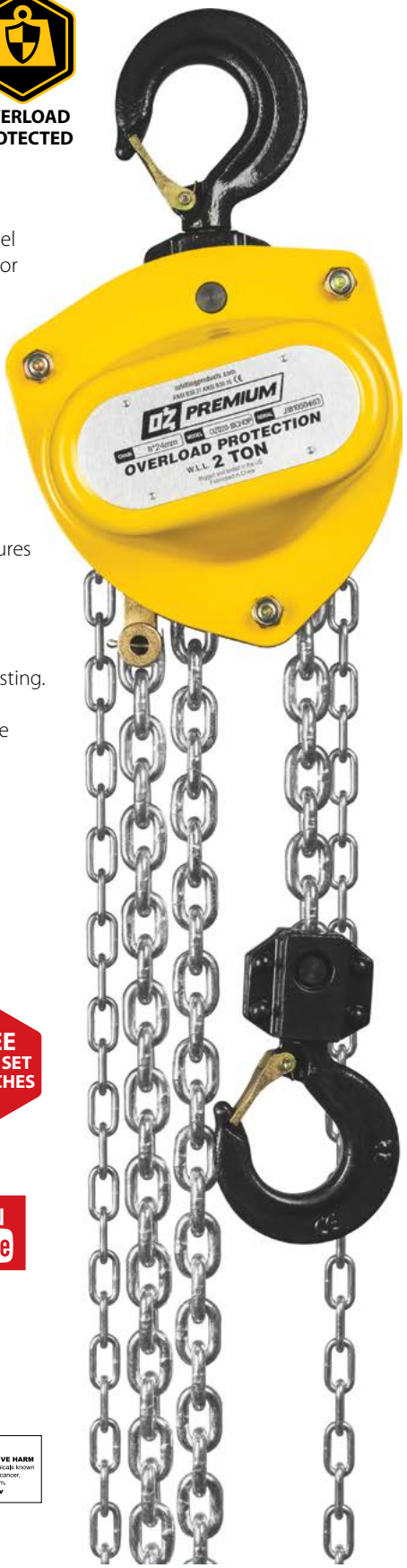

FREE SPARE SET OF LATCHES

You Tube

TESTED USA

WARNING
CANCER AND REPRODUCTIVE HARM
Some products may contain chemicals known to the state of California to cause cancer, or birth defect or reproductive harm.
www.P65Warning.ca.gov

.5,1,1.5,2T

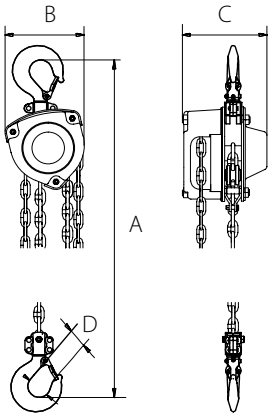

3,5T

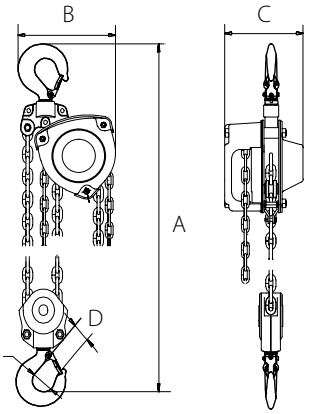

10T

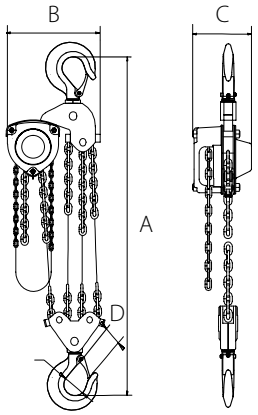

		OZ005-XXCHOP	OZ010-XXCHOP	OZ015-XXCHOP	OZ020-XXCHOP	OZ030-XXCHOP	OZ050-XXCHOP	OZ100-XXCHOP
Capacity (tons)		.5	1	1.5	2	3	5	10
Falls of Chain		1	1	1	1	2	2	4
Effort to Lift S.W.L (lbs)		53	55	58	74	58	79	84
Loadchain Diameter (mm)		6	6	8	8	8	10	10
Dimensional Information (in)	A	13.58	14.80	17.40	18.50	19.29	27.09	30.12
	B	5.83	6.77	7.72	8.28	8.90	11.02	18.23
	C	5.20	5.94	6.81	6.89	6.81	7.44	7.44
Hook-opening, Upper & Lower (in)	D	1.10	1.26	1.42	1.42	1.81	1.81	2.24
Net Weight of Head Only (lbs)		21	24	31	36	41	64	114

***Standard Lift: 10, 15, 20 and 30 ft**.

We also do custom rigging

Dimensions & illustrations are for reference only and subject to change without notice.

20, 30 T

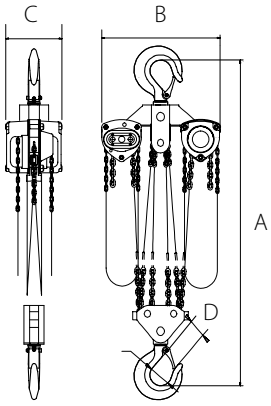

		OZ200-CHOP	OZ300-CHOP
Capacity (tons)		20	30
Falls of Chain		8	12
Effort to Lift S.W.L (lbs)		84 x2	90 x2
Load Chain Diameter (mm)		10	10
Dimensions (in)	A	35.04	54.33
	B	24.80	26.77
	C	7.44	18.23
Hook-opening, Upper & Lower (in)	D	2.23	3.00
Net Weight of Head Only (lbs)		315	360

OZ200-10CHOP



Standard Lift: 10, 15, 20 and 30 ft. - **We also do custom rigging**

Available in 50, 60 and 100 Ton. Please contact for specifications. Special Order.

26' Max length on 30T

Dimensions & illustrations are for reference only and subject to change without notice.



LEVER HOIST

FREE SPARE SET OF LATCHES

Excludes ¼ Ton Model

Features

- All-steel construction
- Aluminum construction (¼ Ton Model)
- Long lasting powder coat finish
- Steel handle with rubber grip
- Minimal load lifting effort
- Weston-Style brake system with twin pawl design
- 100% load tested grade 80 alloy chain
- Fully-enclosed gearing
- Load sheave bearings
- Forged alloy steel hooks
- Heavy-duty latches
- Carrying bag (¼ Ton Model)
- Individual test certificates & serial numbers

Standards - CE, ASME B30.21, AS1418.2

OZIND075-10LH



OZIND025-5LH



0.25,.75, 1.5, 3 T

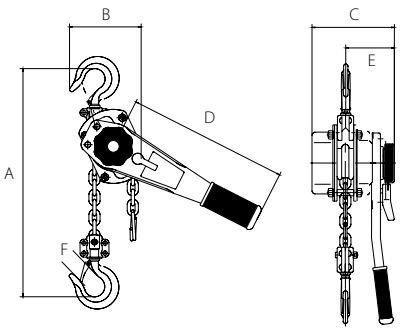

6 T

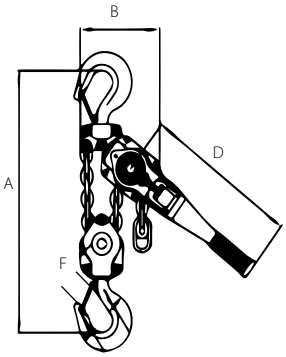

9 T

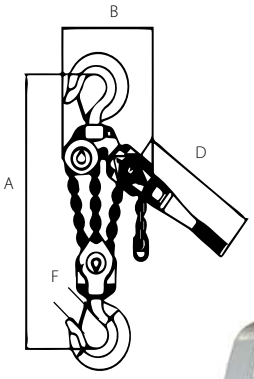

		OZIND025-XXLH	OZIND075-XXLH	OZIND150-XXLH	OZIND300-XXLH	OZIND600-XXLH	OZIND900-XXLH
Capacity (tons)		0.25	0.75	1.5	3	6	9
Effort to Lift S.W.L (lbs)		44	40	66	88	x	x
Falls of Chain		1	1	1	1	2	3
Load Chain Diameter (mm)		4x12	6x18	8x24	10x30	x	x
Product Dimensions (in)	A	9.45	13.38	16.14	20.07	x	x
	B	3.62	5.31	5.91	8.27	x	x
	C	3.86	6.02	6.89	7.83	x	x
	D	6.3	12.2	16.34	16.34	x	x
	E	2.36	3.62	3.98	4.45	x	x
Hook-opening, Upper & Lower	F	0.83	1.1	1.26	1.5	x	x
Net Weight (lbs)		4	12	20	36	x	x

Standard Lift: 5, 10, 15 and 20 ft.
.25 T Models Standard Lift: 5 and 10 ft.

We also do custom rigging

Dimensions and illustrations are for reference only and subject to change without notice.





CHAIN HOIST

FREE SPARE SET OF LATCHES

Excludes ¼ Ton Model

Features

- All-steel construction
- Long lasting powder coat finish
- Minimal load lifting effort
- 100% load tested Grade 80 alloy chain
- Weston-Style brake system with twin pawl design
- Zinc plated hand chain
- Fully-enclosed gearing
- Load sheave bearings
- Forged alloy steel hooks
- Thrust bearing on lower hook
- Heavy-duty latches
- Individual test certificates & serial numbers

Standards - CE, ASME B30.16 and AS1418.2

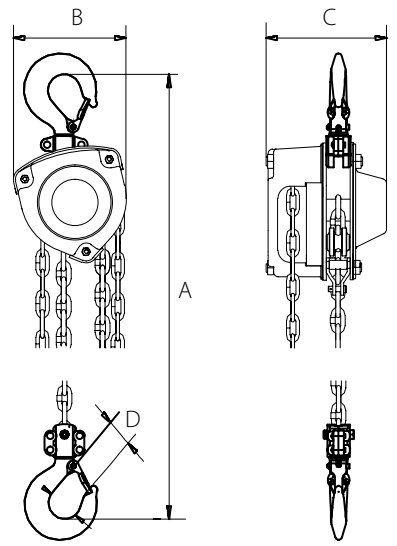

OZIND020-10CH



		OZIND025-CH	OZIND005-CH	OZIND010-CH	OZIND020-CH	OZIND030-CH	OZIND050-CH
Capacity (tons)		0.25	0.5	1	2	3	5
Effort to Lift S.W.L (lbs)		55	55	66	88	88	88
Falls of Chain		1	1	1	1	2	2
Load Chain Diameter (mm)		4x12	5x15	6x18	8x24	8x24	10x30
Product Dimensions (in)	A	10.2	12.8	14.6	17.5	21.7	26.8
	B	4.18	5.35	5.75	7.32	8.2	10.2
	C	4.02	5.2	5.98	6.14	6.1	7.4
Hook-opening, Upper & Lower	D	1.3	1.38	1.73	2	2.28	2.6
Net Weight (lbs)		4	10	16	19	30	56.2

Standard Lift: 5, 10, 15 and 20 ft.
.25 T Models Standard Lift: 5 and 10 ft.

We also do custom rigging

Dimensions and illustrations are for reference only and subject to change without notice.





STAINLESS STEEL
CHAIN HOIST

FREE SPARE SET OF LATCHES

Features

- Stainless Steel Type 304 Construction for Corrosion Resistance
- Fully Enclosed Gearing
- Fully Machined Lift Wheel
- Designed for Lifting or Pulling
- Minimal Load Lifting Effort
- Individual Test Certificate and Serial Number
- Forged Stainless Steel Hooks and Safety Latches
- Stainless Steel Hand & Load Chain
- Weather Proof Load Holding Brake
- All Gears and Shafts Run on Roller Bearings
- Stainless Steel Riveted ID Tags
- Low Headroom

Standards - CE, AS1418.2, ASME B30.21, ASME B30.16

0.5T 1T

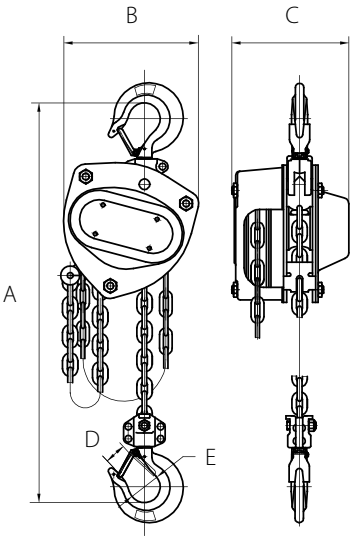

2T 3T 5T

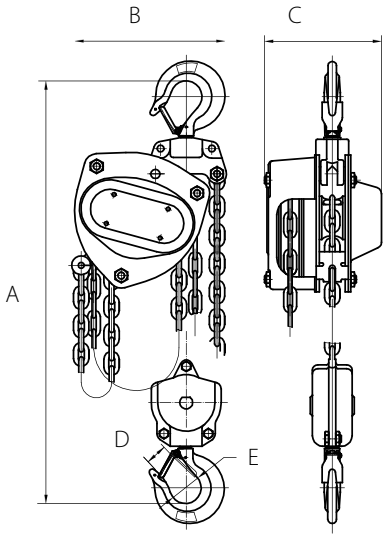



OZSS010-5CH

		OZSS005-XXCH	OZSS010-XXCH	OZSS020-XXCH	OZSS030-XXCH*	OZSS050-XXCH*
Capacity (tons)		0.5	1	2	3	5
Falls of Chain		1	1	2	2	3
Effort to Lift S.W.L (lbs)		67	67	74	74	74
Loadchain Diameter (mm)		7	7	7	9	9
Dimensional Information (in)	A	14.8	14.8	16.73	22.24	27.95
	B	6.77	6.77	7.56	9.06	14.37
	C	5.94	5.94	5.94	6.81	7.44
Hook-opening, upper & lower	D	1.02	1.02	1.33	1.53	1.61
	E	1.57	1.57	1.96	2.16	2.55
Net Weight of Head Only (lbs)		16.3	16.3	22.9	34.7	66.1

*Chain Hoists 3 Ton and 5 Ton available. Special order.

Standard Lift: 10, 15, 20, 30 ft.

We also do custom rigging

Dimensions and illustrations are for reference only and subject to change without notice.

WARNING
CANCER AND REPRODUCTIVE HARM
Some products may contain chemicals known to the state of California to cause cancer, or birth defect or reproductive harm.
www.P65Warning.ca.gov

STAINLESS STEEL
BEAM CLAMP

Features

- Stainless Steel Type 304 Construction for Corrosion Resistance
- Super-Quick Adjustment to most I-Beams
- Stainless Steel I.D. Tag
- Individual Test Certificate and Serial Number

Standards - CE, AS4991, ASME B30.16 (For use with manual or powered hoists)



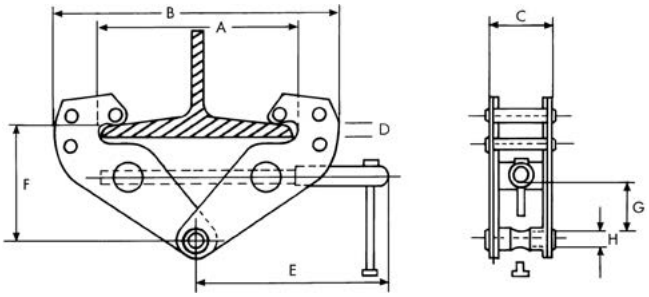

		OZSS1BC	OZSS2BC
Safe Working Load tons)		1	2
	A	2.95-9.05	2.95-9.05
	B	12.2 max.	12.2 max.
	C	2.6	3
Dimensions (in)	D	.94	.94
	E	7.68	7.68
	F	5.12-6.57	5.12-6.57
	G	1.57	1.57
	H	.78	.9
Net Weight (lbs)		9	11

STAINLESS STEEL
PUSH BEAM TROLLEY

Features

- Stainless Steel Type 304 Construction for Corrosion Resistance
- Fits to most I, S, and W-Beams
- Individual Test Certificate and Serial Number
- Anti-Drop Plate
- Stainless Steel ID Tag
- Precision Ball Bearing Trolley Wheels

Standards - CE, AS1418.2, ASME B30.11, ASME B30.16 (For use with manual or powered hoists)

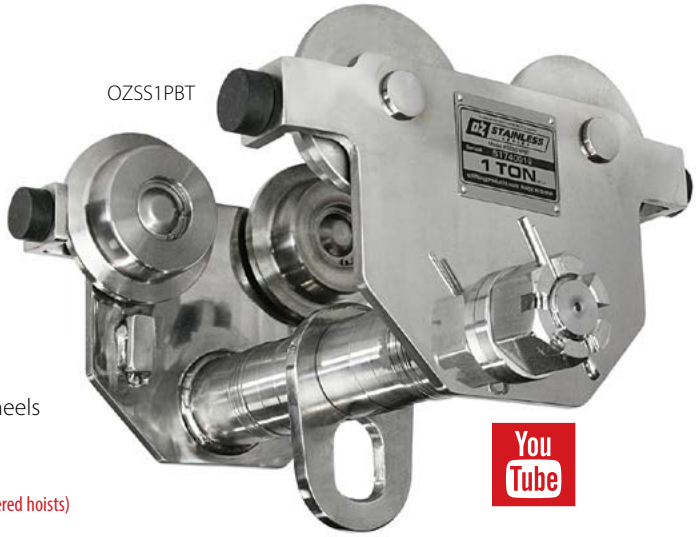

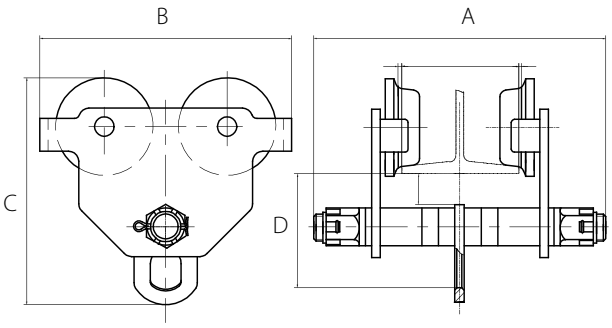

		OZSS05PBT	OZSS1PBT	OZSS2PBT	OZSS3PBT*	OZSS5PBT*
Safe working load (tons)		.5	1	2	3	5
Adjustable flange width (in)		2–6	2.5–8	3.5–8	4-6	4.5-6
Max flange thickness (in)		1.06	1.06	1.06	1.10	1.14
Product dimensions (in)	A	10	13	13.22	14.56	15.15
	B	7.83	9.68	10.86	13.07	14.84
	C	7.6	9	10.55	12.44	14.17
	D	4	5	5.9	6.8	7.8
Minimum radius curve (ft)		2.62	3.28	3.60	4.26	4.59
Net weight (lbs)		18.7	26.5	43	64	97

* Push Beam Trolleys 3 Ton and 5 Ton available. Special order.
Geared Beam Trolleys .5 Ton – 5 Ton available. Special order.
8" flange width available upon request.

WARNING
CANCER AND REPRODUCTIVE HARM
Some products may contain chemicals known to the state of California to cause cancer, or birth defect or reproductive harm.
www.P65Warning.ca.gov

SPARK RESISTANT CHAIN HOIST

OZ SPARK RESISTANT SERIES

OZSR020-5CH

FREE SPARE SET OF LATCHES

Features

These products comply with EU's explosion-proof standard ATEX94/9/EC and the Machinery Directive 2006/42/EC. The manufacturer has passed ISO9001, ISO14001, CE/GS, ATEX, LR, CCS and other related certifications. The product explosion-proof level can reach: EX II2 GD c IIIC T135°C. Suitable for: potential explosive atmosphere. Area: Zone 1 & 2 (gas), Zone 21 & 22 (dust).

- Type EX-F3 Spark Resistant
- Unique Hand Wheel Design
- Minimal Load Lifting Effort
- Fully Enclosed Gearing
- Stainless Steel Safety Latches
- Stainless Steel Hand Chain
- Copper Plated Hooks Hand Wheel, and Roller Guides
- Individual Test Certificate and Serial Number
- Dacromet® Finish Load Chain
- Fully Machined Lift Wheel
- Totally Enclosed Gearing
- For Lifting or Pulling
- Low Headroom
- Weatherproof Load Holding Brake
- All Gears and Shafts Run on Roller Bearings
- Copper Riveted ID Tags

Standards - CE, EX-F3 (Ex II 2 GD c IIC T4 IIIC T135°C), AS1418.2, ASME B30.1



0.5T – 3T

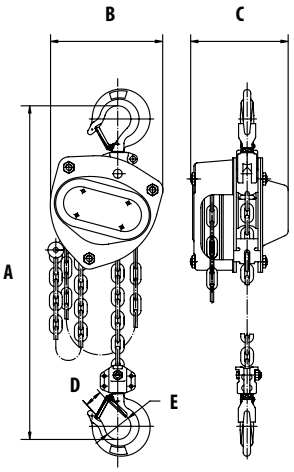

5T

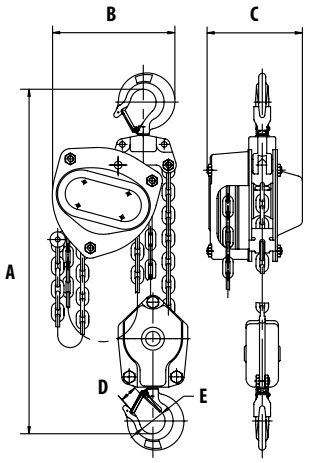

10T

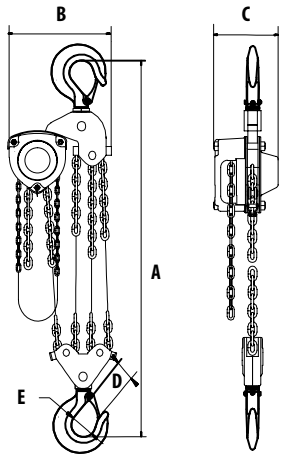

		OZSR005-XXCH	OZSR010-XXCH	OZSR020-XXCH	OZSR030-XXCH	OZSR050-XXCH	OZSR100-XXCH
Capacity (tons)		0.5	1	2	3	5	10
Falls of Chain		1	1	1	1	2	4
Effort to Lift S.W.L (lbs)		54	56	75	83	85	87
Loadchain Diameter (mm)		5x15	6x18	8x24	10x30	10x30	10x30
Dimensional Information (in)	A	13.58	14.80	18.50	22.83	27.16	30.71
	B	5.82	6.77	8.26	10.03	11.02	15.16
	C	5.19	5.94	6.88	8.07	7.44	7.44
Hook-opening, upper & lower	D	0.90	1.02	1.33	1.53	1.61	1.93
	E	1.37	1.57	1.96	2.16	2.55	3.35
Net Weight of Head Only (lbs)		13	18	31	51	60	114

Standard Lift: 10, 15, 20, 30 ft.

We also do custom rigging

Dimensions and illustrations are for reference only and subject to change without notice.

YouTube

TESTED USA

WARNING
CANCER AND REPRODUCTIVE HARM
Some products may contain chemicals known to the state of California to cause cancer, or birth defect or reproductive harm.
www.P65Warning.ca.gov

SPARK RESISTANT
PUSH BEAM TROLLEY

OZ SPARK RESISTANT SERIES

Features

These products comply with EU's explosion-proof standard ATEX94/9/E and the Machinery Directive 2006/42/EC. The manufacturer has passed ISO9001, ISO14001, CE/GS, ATEX, LR, CCS and other related certifications. The product explosion-proof level can reach: EX II2 GD c IIIC T135°C. Suitable for: potential explosive atmosphere. Area: Zone 1 & 2 (gas), Zone 21 & 22 (dust).

- Type EX–GCT Spark Resistant Equipped with anti-spark coating, suitable for potential explosive atmospheres.
- Copper plated wheels and lifting ring
- Copper riveted ID Tags
- Fits to most I, S, and W-Beams
- Precision ball bearing trolley wheels
- Anti-drop plate
- Individual test certificate & serial number

OZSR2PBT



Standards - CE, ATEX–GCT, (Ex II 2 GD c IIC T4 IIIC T135°C), AS1418.2, ASME B30.11, ASME B30.16 (For use with manual or powered hoists)

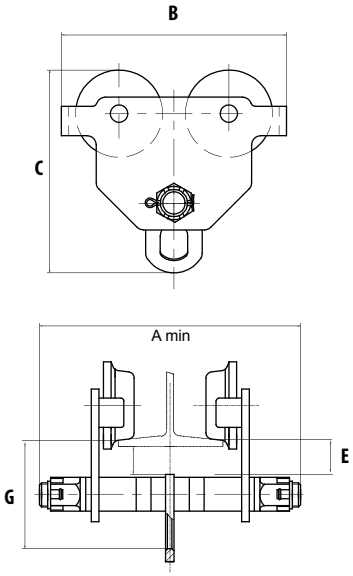

PRODUCT CODE		OZSR05PBT	OZSR1PBT	OZSR2PBT	OZSR3PBT	OZSR5PBT	OZSR10PBT
Safe working load (tons)		.5	1	2	3	5	10
Minimum radius curve (ft)		2.62	3.28	3.61	4.26	4.59	6.56
Product dimensions (in)	A min	11.61	12.24	16.89	17.52	17.99	19.29
	B	7.83	9.69	10.87	13.07	14.84	16.69
	C	7.36	8.74	10.34	12.17	13.90	15.59
	G	4.13	4.92	5.91	6.73	7.72	7.48
Max flange thickness (in)	E	1.18	1.50	1.50	1.57	1.65	1.77
Adjustable flange width (in)		1.97-8.00	2.50-8.00	3.64-12.00	3.94-12.00	4.50-12.00	4.88-12.00
Net weight (lbs)		16	23	42	64	95	196

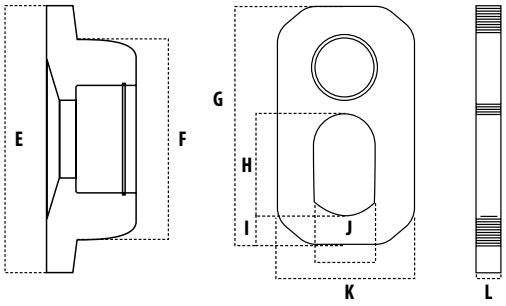

Wheel & Bail dimensions

SIZE	0.5T	1T	2T	3T	5T	10T
E	3.11	3.74	4.25	5.12	5.63	6.93
F	2.17	2.68	3.15	3.94	4.33	5.35
G	3.50	4.02	5.12	6.02	7.24	7.68
H	1.26	1.58	2.05	2.48	2.95	4.72
I	0.57	0.59	0.71	0.87	1.18	1.77
J	0.98	1.18	1.50	1.58	1.97	2.84
K	1.97	2.44	2.95	3.35	4.25	11.42
L	0.24	0.32	0.47	0.55	0.63	0.98

Dimensions and illustrations are for reference only and subject to change without notice.

TESTED USA

WARNING
CANCER AND REPRODUCTIVE HARM
Some products may contain chemicals known to the state of California to cause cancer, or birth defect or reproductive harm.
www.P65Warning.ca.gov

DYNAMOMETER EQUIPPED CHAIN HOIST

DYNO-HOIST

FREE SPARE SET OF LATCHES

Features

The Dyno-Hoist provides an accurate and reliable reading of the weight of the load being lifted and displays "OVER" when you have reached 126% rated capacity of the hoist. The integrated dynamometer can display the load weight in kg or lbs. and runs on standard AA batteries with a run time of 150 hours. When not in use the battery energy saving system turns off the dynamometer. This scale is used for weighing loads not for piece counting.

- All-steel construction
- 100% load tested grade 80 alloy chain
- Fully-enclosed gearing
- Long lasting powder coat finish
- Load sheave bearings
- Steel handle with rubber grip
- Forged alloy steel hooks
- Minimal load lifting effort
- Heavy-duty latches
- Weston-Style brake system

Standards - CE, ASME B30.21, AS1418.2



OZDH75-10CH

0.75T, 1.5T, 3T

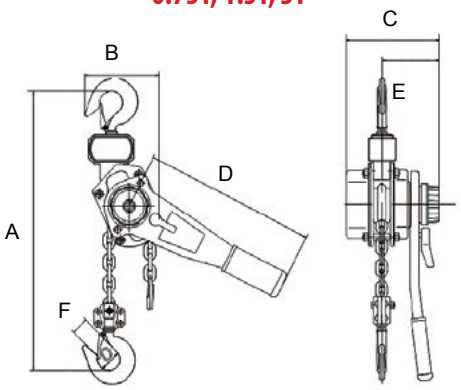

6T, 9T (3 falls of chain)

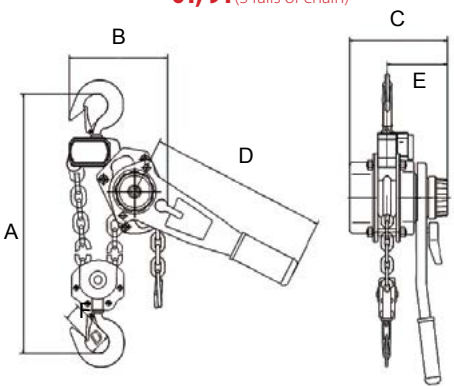

		OZDH075-XXLH	OZDH150-XXLH	OZDH300-XXLH	OZDH600-XXLH	OZDH900-XXLH
Capacity (tons)		0.75	1.5	3	6	9
Effort to Lift S.W.L (lbs)		31.4	49.5	72	76.5	81
Falls of Chain		1	1	1	2	3
Load Chain Diameter (mm)		6x18	8x24	10x30	10x30	10x30
Product Dimensions (in)	A	14.96	16.73	21.65	24.41	27.56
	B	5.28	5.91	7.48	9.53	12.09
	C	5.71	6.89	7.68	7.68	7.68
	D	11.22	16.14	16.14	16.14	16.14
	E	3.39	3.94	4.53	4.53	4.53
Hook-opening, Upper & Lower	F	1.06	1.42	1.50	1.89	2.13
Net Weight (lbs)		16.5	27.94	45.10	66.00	96.80

Standard Lift: 5, 10, 15, 20 ft.

We also do custom rigging

Dimensions and illustrations are for reference only and subject to change without notice.

TESTED USA

YouTube

WARNING
CANCER AND REPRODUCTIVE HARM
Some products may contain chemicals known to the state of California to cause cancer, or birth defect or reproductive harm.
www.P65Warning.ca.gov

NEED NEW LOGO

BEAM CLAMP USA



OZ1BCA-MR

MADE IN USA

Features

- Fall protection 400lbs
- Robust all-steel fully-welded construction
- Super-quick adjustment to most I-Beams (see measurements below)
- ROHS compliant zinc plated finish
- Permanent engraved load rating
- Secondary rod lock nut
- Made in USA

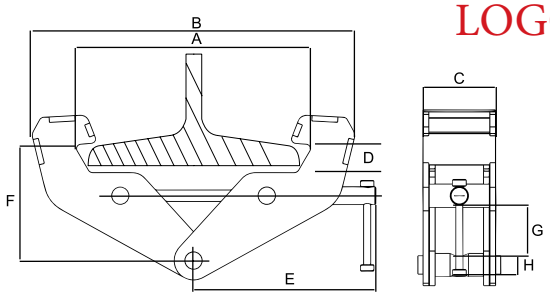

Standards:

This product meets or exceeds
OSHA 1926 Subpart M
OSHA 1910.140
ASME Z359.1
ASME A10.32-2012
standards for fall protection.

		OZ1BCA-MR	OZ2BCA-MR	OZ3BCA-MR	OZ5BCA-MR	OZ10BCA-MR
Capacity (tons)		1	2	3	5	10
Fall Protection (lbs)		400	400	400	400	400
Dimensional Information (in)	A	3 – 8	3 – 8	3.5 – 13	3.5 – 13	3.5 – 13
	B	14.75	14.75	20.5	20.5	22
	C	2.51	2.91	3.94	4.41	4.72
	D	0.9	0.9	1.5	1.5	1.6
	E	9.5	9.5	11	11	11.5
	F	4.75 – 5.75	4.75 – 5.75	7.5 – 9	7.5 – 9	5.5 – 9.375
	G	1.75	1.75	2.5	2.5	4
	H	.75	.875	.975	1.125	1.625
Net Weight (lbs)		9	11	22	26	39

Dimensions and illustrations are for reference only and subject to change without notice.

NEED NEW LOGO

PUSH BEAM TROLLEY USA



OZ1PBTA-MR

MADE IN USA

Features

- Fall protection 400 lbs.
- Fast and easy width adjustments
- Built-in width adjustment indicator
- Universal wheel tread fits most I, S, and W-Beams
- Premium double-sealed ball bearings
- ROHS compliant zinc plated finish
- Anti-drop plates
- Glow in the dark decals
- Ships fully assembled
- Made in USA

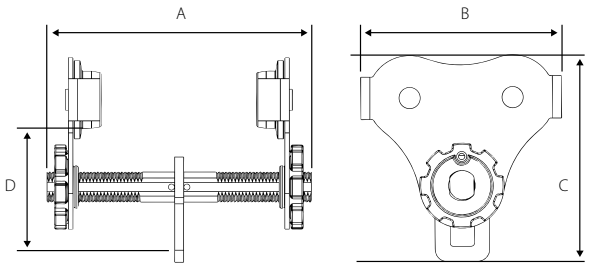

Standards:

This product meets or exceeds
OSHA 1926 Subpart M
OSHA 1910
ASME Z359.1-2007
ASME A10.32-2012
standards for fall protection.

PRODUCT CODE		OZ05PBTA-MR	OZ1PBTA-MR
Capacity (tons)		5	1
Fall Protection (lbs)		400	400
Adjustable Flange Width (in)		2.75-8.00	2.75-8.00
Max Flange Thickness (in)		1.12	1
Product Dimensions (in)	A	11	11
	B	8.30	10.20
	C	8.50	9.80
	D	5.00	5.50
Minimum Radius Curve (ft)		2.75	3.35
Net Weight (lbs)		16	26

WARNING
CANCER AND REPRODUCTIVE HARM
Some products may contain chemicals known to the state of California to cause cancer, or birth defect or reproductive harm.
www.P65Warning.ca.gov

Dimensions and illustrations are for reference only and subject to change without notice.

See wheel & bail dimensions page 18

BEAM CLAMP USA

MADE IN USA



OZ5BCA

Features

- Robust all-steel fully-welded construction
- Super-quick adjustment to fit most I-Beams (see measurements below)
- ROHS compliant zinc plated finish
- Permanent engraved load rating
- Individual test certificate and serial number
- Made in USA

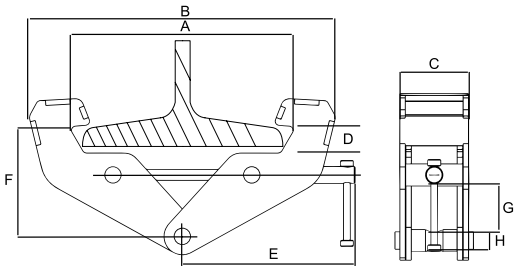

Standards - CE, ASME B30.16

		OZ1BCA	OZ2BCA	OZ3BCA	OZ5BCA	OZ10BCA
Capacity (tons)		1	2	3	5	10
Dimensions (in)	A	3 – 9	3 – 9	3.5 – 13	3.5 – 13	3.5 – 13
	B	14.75	14.75	20.5	20.5	22
	C	2.51	2.91	3.94	4.41	4.72
	D	0.9	0.9	1.5	1.5	1.5
	E	9.5	9.5	11	11	11.5
	F	4.75 – 5.75	4.75 – 5.75	7.5 – 9	7.5 – 9	5.5 – 9.375
	G	1.75	1.75	2.5	2.5	4
	H	.75	.875	.975	1.125	1.625
Net Weight (lbs)		9	11	22	26	39

Dimensions and illustrations are for reference only and subject to change without notice.

PUSH BEAM TROLLEY USA

MADE IN USA



OZ1PBTA
[PATENTED]

Features

- Fastest adjusting trolley requiring no tools to install
- Lightweight robust construction
- ROHS compliant zinc plated finish
- Glow in the dark decals
- Universal wheel tread fits most I, S, and W-Beams
- Precision ball bearing trolley wheels
- Side plates protect trolley wheels
- Anti-drop plate
- Individual test certificate and serial number
- Made in USA

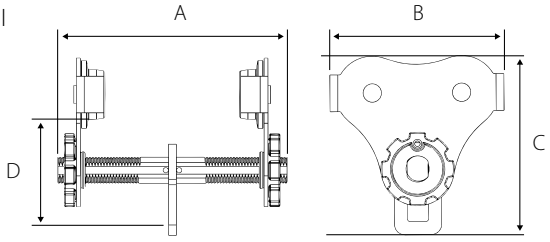

***12" and 16" inch rods available for OZ05PBTA and OZ1PBTA**

Standards - ASME B30.11, ASME B30.16

		OZ05PBTA	OZ05PBTA-12	OZ05PBTA-16	OZ1PBTA	OZ1PBTA-12	OZ1PBTA-16	OZ2PBTA	OZ3PBTA
Capacity (tons)		.5	.5	.5	1	1	1	2	3
Adjustable flange width (in)		2.52-8.00	2.52-12.00	2.52-16.00	2.75-8.00	2.75-12.00	2.75-16.00	3.75-8.00	3.75-8.00
Max Flange Thickness (in)		1.12	1.12	1.12	1	1	1	1.5	1.75
Product dimensions	A	12.25	15.5	19.5	11	15.5	19.5	14	14
	B	8.3	8.3	8.3	10.2	10.2	10.2	12	15.4
	C	8.5	8.5	8.5	9.8	9.8	9.8	11.9	14
	D	5	5	5	5.5	5.5	5.5	8.5	9.87
Minimum radius curve (ft)		2.75	2.75	2.75	3.35	3.35	3.35	4.5	5
Net weight (lbs)		16	19	20	26	30	31	45	80

See wheel and bail dimensions on page 18

Dimensions and illustrations are for reference only and subject to change without notice.

WARNING
CANCER AND REPRODUCTIVE HARM
Some products may contain chemicals known to the state of California to cause cancer, or birth defect or reproductive harm.
www.P65Warning.ca.gov

BEAM CLAMP

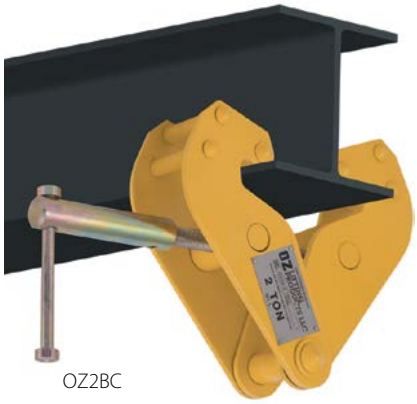

OZ2BC

Features

- Robust, all-steel construction
- Super-quick adjustment to fit most I-Beams (see measurements below)
- Durable baked-enamel paint protection
- Stainless steel ID tag
- Individual test certificate and serial number

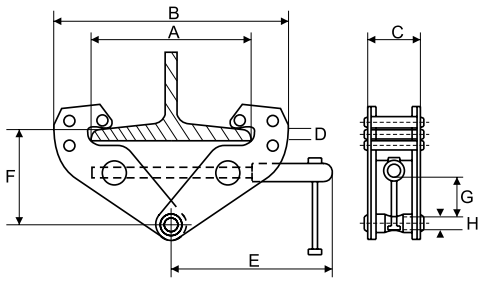

		OZ1BC	OZ2BC	OZ3BC	OZ5BC	OZ10BC
Capacity (tons)		1	2	3	5	10
Dimensions (in)	A	2.95-9.05	2.95-9.05	3.15-12.60	3.54-12.60	3.54-12.60
	B	14.96 max.	14.96 max.	18.50 max.	19.68 max.	20.47 max.
	C	2.51	2.91	3.94	4.41	4.72
	D	.90	.90	1.57	1.57	1.60
	E	9.13	9.13	10.63	10.90	11.22
	F	3.54-5.90	3.54-5.90	5.71-8.66	5.71-8.66	6.30-9.05
	G	1.02	1.02	2.63	3.50	3.87
	H	.75	.87	.96	1.30	1.60
Net Weight (lbs)		9	11	21	25	35

Standards - CE, ASME B30.16

Dimensions and illustrations are for reference only and subject to change without notice.

PUSH BEAM TROLLEY

Features

- Lightweight robust construction
- Fits most I, S, and W-Beams
- Durable baked enamel paint protection
- Precision ball bearing trolley wheels
- Anti-drop plate
- Stainless steel ID tag
- Individual test certificate and serial number

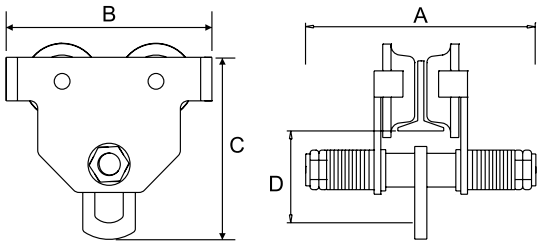



OZ1PBT

		OZ05PBT	OZ1PBT	OZ2PBT	OZ3PBT	OZ5PBT	OZ10PBT
Capacity (tons)		.5	1	2	3	5	10
Adjustable Flange Width (in)		2.52-8.00	2.52-8.00	3.46-12.00	4.00-12.00	4.49-12.00	4.95-12.00
Max Flange Thickness (in)		1.14	1.50	1.61	1.81	2.28	1.97
Product Dimensions (in)	A	12.25	12.75	17.50	17.31	18.87	17.56
	B	8.50	9.45	11.81	13.58	15.55	16.75
	C	7.67	8.41	11.26	13.23	15.47	16.00
	D	4.33	4.90	6.34	7.28	8.66	7.5
Minimum Radius Curve (ft)		2.95	3.28	3.60	4.26	4.59	5.57
Net Weight (lbs)		20	23	37	78	114	198

Standards - CE, ASME B30.11, ASME B30.16



See wheel and bail dimensions on page 18

Dimensions and illustrations are for reference only and subject to change without notice.

PUSH BEAM TROLLEY WHEELS & BAIL DIMENSIONS

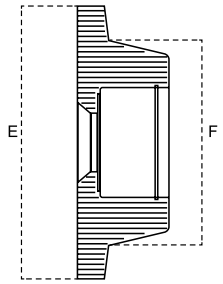

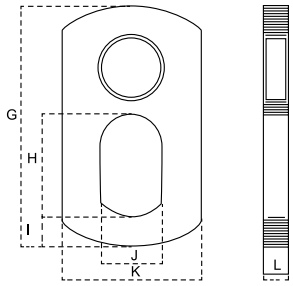

USA – See product page 15 & 16

	OZ05PBTA	OZ1PBTA	OZ2PBTA	OZ3PBTA
E (in)	3.25	4.00	4.5	5.75
F (in)	2.38	3.00	3.25	4.38
G (in)	4.38	5.00	6.25	6.88
H (in)	1.50	1.88	2.25	2.5
I (in)	0.63	0.63	0.88	1.0
J (in)	1.00	1.25	1.38	1.5
K (in)	2.25	2.50	3.13	3.5
L (in)	0.38	0.50	0.50	0.63

Import – See product page 17

	OZ05PBT	OZ1PBT	OZ2PBT	OZ3PBT	OZ5PBT	OZ10PBT
E (in)	2.83	3.50	4.00	5.79	6.30	7.45
F (in)	2.05	2.48	2.68	4.34	4.81	5.95
G (in)	4.05	4.21	5.31	7.09	8.67	11.23
H (in)	1.50	1.50	2.01	2.96	3.75	4.73
I (in)	0.75	0.75	0.87	1.03	1.38	1.78
J (in)	1.25	1.25	1.50	1.78	2.37	3.23
K (in)	2.25	2.25	2.76	3.94	4.73	5.91
L (in)	0.39	0.39	0.47	0.63	0.79	0.99

Dimensions and illustrations are for reference only and subject to change without notice.

QUICK ADJUST TROLLEY

OZ1QAT



Features

- Lightweight, robust construction.
- Super-quick adjustment to most I, S, and W-Beams (see measurements below)
- Safety handle lock
- Durable baked-enamel paint protection
- Precision ball bearing trolley wheels
- Anti-drop plate
- Stainless steel ID tag
- Individual test certificate and serial number

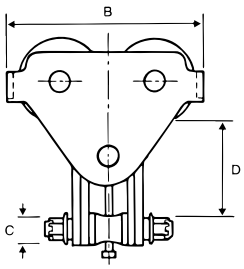

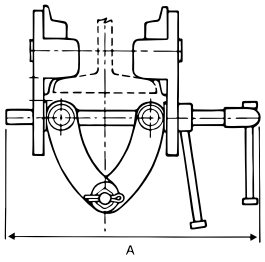

Standards - CE, ASME B30.11, ASME B30.16

		OZ05QAT	OZ1QAT	OZ2QAT	OZ3QAT	OZ5QAT	OZ10QAT
Capacity (tons)		.5	1	2	3	5	10
Adjustable Flange Width (in)		3.63-7.12	2.48-8.27	2.99-8.27	2.99-8.27	3.94-12.01	6.89-12.01
Max Flange Thickness (in)		1.44	2	2.17	1.42	3.07	2.13
Dimensional Information (in)	A	11.75	13.98	14.17	14.17	18.50	18.90
	B	8.00	9.53	11.06	12.91	14.84	17.91
	C	.75	.88	.88	.97	1.11	1.65
(min-max)	D	5.87-7.12	5.75-7.22	6.06-7.22	6.35-7.97	8.81-10.61	9.00-10.51
Minimum Curve Radius (ft)		3.28	3.28	3.61	4.26	4.60	5.57
Net Weight (lbs)		13	25	38	57	102	205

Dimensions and illustrations are for reference only and subject to change without notice.

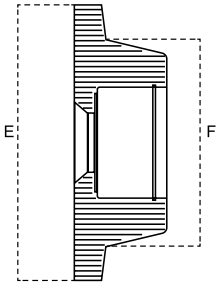

	OZ05QAT	OZ1QAT	OZ2QAT	OZ3QAT	OZ5QAT	OZ10QAT
E (in)	3.22	4.02	5.00	5.79	6.30	7.34
F (in)	2.28	2.96	3.55	4.34	4.81	5.96

Dimensions and illustrations are for reference only and subject to change without notice.

WARNING
CANCER AND REPRODUCTIVE HARM
Some products may contain chemicals known to the state of California to cause cancer, or birth defect or reproductive harm.
www.P65Warning.ca.gov

GEARED BEAM TROLLEY

Features

- Lightweight robust construction
- Fits most I, S, and W-Beams
- Durable baked enamel paint protection
- Gearing for positive load positioning
- Precision ball bearing trolley wheels
- Anti-drop plate
- Stainless steel ID tag
- Individual test certificate & serial number

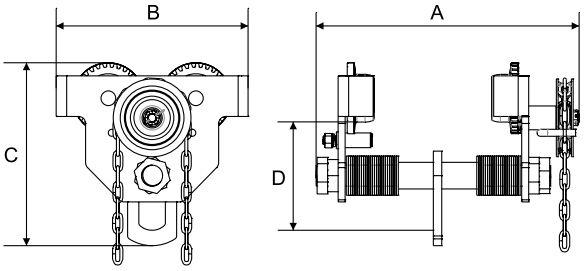

OZ5GBT



		OZ1GBT	OZ2GBT	OZ3GBT	OZ5GBT	OZ10GBT	OZ20GBT	OZ30GBT
Capacity (tons)		1	2	3	5	10	20	30
Adjustable Flange Witdh (in)		2.52-7.99	3.46-7.99	3.46-7.99	3.46-7.99	4.88-7.99	5.39-12.99	5.83-12.99
Max Flange Thickness (in)		1.50	1.61	1.81	2.28	1.97	2.17	2.36
Product Dimensions (in)	A	14.96	15.20	16.38	17.09	15.59	26.54	27.56
	B	9.45	10.63	12.60	13.62	16.77	20.55	23.31
	C	8.41	10.28	12.48	15.08	15.75	19.65	24.33
	D	4.90	6.08	7.30	9.09	8.31	9.96	15.35
Minimum Radius Curve (ft)		3.28	4.27	4.92	5.25	8.3	11.48	14.76
Net Weight (lbs)		29	42	62	90	183	406	650
Standard Length of Hand Chain (ft)		9.00	9.00	9.00	9.00	9.00	9.00	9.00
Effort to Pull (lbs)		10	18	29	24	42	18	24
Chain pulled to move one foot (ft)		3.80	3.90	3.70	4.02	18.90	47.83	31
Bail Pins		1	1	1	1	2	2	2

Standards - CE, ASME B30.11, ASME B30.16

Dimensions and illustrations are for reference only and subject to change without notice.
Available in 50 and 100 Ton please contact for specifications. Special order.

OZ30GBT



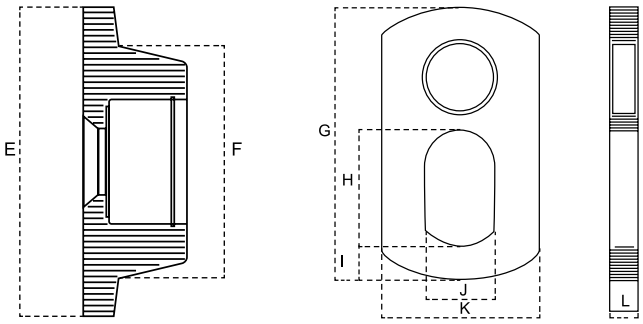

	OZ1GBT	OZ2GBT	OZ3GBT	OZ5GBT	OZ10GBT	OZ20GBT	OZ30GBT
E (in)	3.50	4.00	5.79	6.30	7.45	10.76	10.76
F (in)	2.48	2.68	4.34	4.81	5.95	7.88	7.88
G (in)	3.86	5.31	7.09	8.67	11.23	12.99	13.19
H (in)	1.46	2.01	2.96	3.75	4.73	5.91	5.91
I (in)	0.51	0.87	1.03	1.38	1.78	2.75	2.75
J (in)	1.02	1.50	1.78	2.37	3.23	4.33	4.33
K (in)	1.91	2.76	3.94	4.73	5.91	9.45	9.45
L (in)	0.39	0.47	0.63	0.79	0.99	1.38 ()	1.18

With Gear Reduction

20 T and 30 T

Dimensions and illustrations are for reference only and subject to change without notice.





ELECTRIC CHAIN HOIST

OZ ELECTRIC SERIES
OVERLOAD PROTECTED

Features

Overload Protection – High performance friction clutch that is integrated with the load brake. This device is designed to prevent overloading the hoist.

Hook – Forged carbon steel load hook with a heavy duty latch. Bottom hook features a thrust bearing to allow 360° rotation to prevent twisting of load chain. Top hook is rigid.

Load Sheave – Provides better distribution of the load and smooth lifting with reduced vibration and wear.

Gearing – Precision machined gears heat treated for strength and durability. Oil bath lubrication on all bearing rotating points for a quieter, smoother and cooler operation.

Braking – Dual braking system combines mechanical plus regenerative braking for instant and safe operation.

Chain – Grade 80 alloy steel designed and manufactured in Japan for long and dependable service life.

H3 Duty Class – 25-30% duty cycle for operation in various applications.

115V Power – 115/1/60 – Standard power making it easy to use virtually anywhere.

Pendant Controls – IP64 ergonomic pendant design for operator comfort. Lift and lower load easily with integrated emergency stop.

Compact Aluminum Body – Compact and lightweight powder coated cast aluminum alloy body making it perfect for many work station applications.

Chain Bag – Durable vinyl bag comes standard. Oversized chain bag available on request.

Standards - CE

OVERLOAD PROTECTED



OZ1000EC

TESTED USA

WARNING
CANCER AND REPRODUCTIVE HARM
Some products may contain chemicals known to the state of California to cause cancer, or birth defect or reproductive harm.
www.P65Warning.ca.gov

	OZ500EC	OZ1000EC	OZ2000EC	OZ4000EC
Voltage	115 / 1 /60	115 / 1 /60	115 / 1 /60	115 / 1 /60
Capacity (lbs)	500	1000	2000	4000
Falls of Chain	1	1	1	2
Speed (FPM)	12.5	20	13	6.5
Motor (HP)	.25	1.8	2.4	2.4
Motor KW	180W/4A	1400W/10A	1800W/13A	1800W/13A
Standard Lift (ft)	20	20	10	10
Duty Cycle (min)	15 (25%)	18 (30%)	18 (30%)	18 (30%)
Pendant Length (ft)	15	19	19	19
Power Cord Length (ft)	15	15	15	15
Load Chain Diameter (mm)	4	6.3	7.1	7.1
Net Weight (lbs)	18	53	59	84

We also do custom rigging

500, 1000, 2000, 4000 LBS

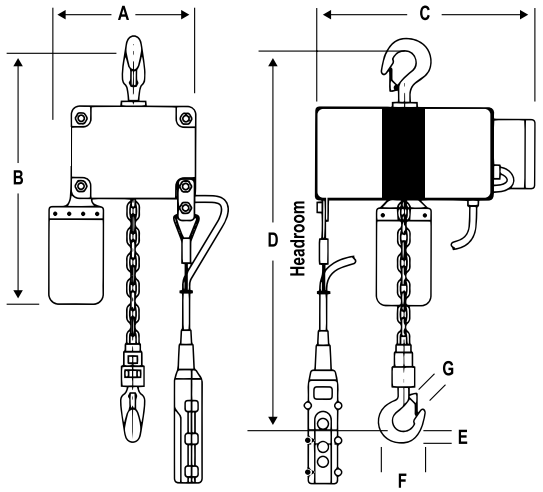

	OZ500EC	OZ1000EC	OZ2000EC	OZ4000EC
A (in)	5	6.69	8.27	10.63
B (in)	15	27	28	30
C (in)	9.5	17.72	20.08	20.08
D – Headroom (in)	11	16.93	18.90	24.40
E (in)	0.6.	1.02	1.14	1.61
F (in)	2.5	3.62	3.90	5
G (in)	0.75	0.87	1.22	1.5

Dimensions and illustrations are for reference only and subject to change without notice.



OZ500EC



ELECTRIC BUILDER'S HOIST

Features

- Lightweight and compact design for convenient mounting
- Automatic shut-off when rope reaches limit arm
- Dynamic and mechanical brake provides instant and safe braking
- Upper and lower limit switches for additional safety
- Sensor arm for motor shut-off to prevent reverse winding
- Galvanized wire rope with 360-degree weighted hook includes safety latch
- Quick release pendant and power cords
- Standard 115V power source-compatible
- Wireless remote control for ease of use (Model OBHW600 only)
- Emergency UP / DOWN control switch (Model OBHW600 only)
- Individual test certificate & serial number
- Wireless adapter available for OBH500 & OBH1000

75 fpm OBH500 | **52 fpm** OBHW600 | **37 fpm** OBH1000



OBHW600

Standards - CE

	OBH500	OBHW600	OBH1000
Capacity - Full Drum (lbs)	500	600	1000
Motor Voltage	115/1/60	115/1/60	115/1/60
Speed (fpm)	75	52	37
Motor (HP)	1.74	2	2.41
Motor KW	1300W/17.5A	1500W/12.5A	1800W/15.5A
Lifting Height (ft)	90	90	90
Wire Rope (in)	3/16	3/16	1/4
Gross Weight* (lbs)	54	49	73
Power cord length (ft)	15	15	15
Pendant length (ft)	65	n/a	65
Full Load (AMPS)	17.5	12.5	15.5
Duty Cycle (min)	15 (25%)	15 (25%)	15 (25%)

*Includes lower hook, power and pendant cable / *Includes lower hook and power cable (OBHW600)
100 ft. pendant length available

500, 600, 1000 LBS

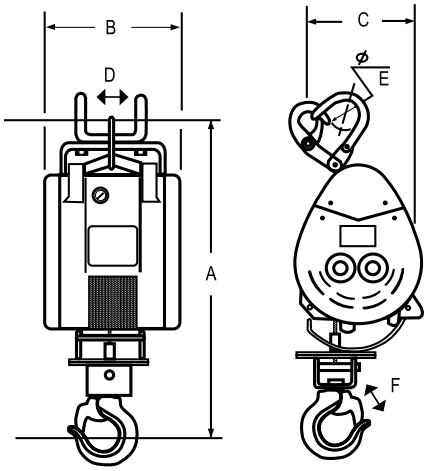

		OBH500	OBHW600	OBH1000
A (in)	Height	26.77	26.77	28.50
B (in)	Width	9.50	9.50	10.50
C (in)	Depth	7.88	9.06	12.00
D (in)	Hanger Inner Width	4.50	4.50	5.50
E (in)	Hanger Opening	2	2	2
F (in)	Hook Opening	1.62	1.62	1.50

Dimensions and illustrations are for reference only and subject to change without notice.





MOUNTING AND LIFTING SOLUTIONS

MADE IN USA

Mounting Arm Bracket (Pipe-Mount and Wall-Mount)

- Long last powder coat finish
- Portable / Light Weight
- Made in USA
- Solid mounting bracket
- Quick mount
- Includes mounting template



	OBH230	OBH230-WALL
W - Width (in)	40 1/2	40 1/2
H - Height (in)	17 3/4	17 3/4
D - Mounting Pipe (in)	2	N/A
Capacity (lbs)	1000	1000
Net Weight (lbs)	26	31

Pipe Not Included

Reverse Way Mounting

Both OBH230 and OBH230-WALL can be reversed mounted. Ideal for low headroom situations.

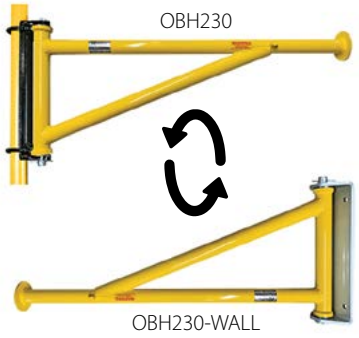



Wall-Mount Bracket



MADE IN USA

OZ05PBTA-OBH

Trolley with OBH Hanger

Contact us for more information.

Refer to OZ05PBTA dimensions on page 15



MADE IN USA

OZGBT-OBH

OBH Hanger

Contact us for more information.



OZGBT-OBH

Geared Trolley with OBH Hanger

Contact us for more information.

Refer to OZ1GBT dimensions on page 19

MADE IN USA

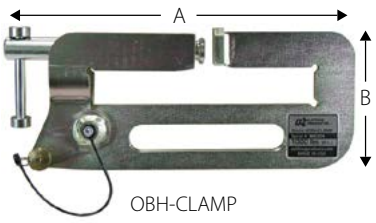

OBH-CLAMP

Builder's Hoist Beam Clamp

OBH-CLAMP	
A - Width (in)	13.5
B - Height (in)	5.375
Max flange width (in)	8
Capacity (lbs)	1000
Net Weight (lbs)	8

Contact us for more information.





OZBAG3

Hoist Bucket

Contact us for more information.

Hoist bucket rated at 150 lbs.

CARBON STEEL & STAINLESS STEEL BRAKE WINCHES

Features

- All steel construction
- Compact design
- Ergonomic rubber handle
- Multiple frame mounting positions
- Fully enclosed gearing
- Solid machined gear
- Drill drive adapter standard on stainless steel. Optional on carbon steel
- Automatic weatherproof weston brake
- Dual cable anchor point
- Large diameter drum
- High gear ratio
- Test certificate & serial number
- For lifting or pulling/tensioning



Standard - CE



Drill Drive Adapter

Cable/Drum Capacity	1st layer (ft)	Mid drum (ft)	Full drum (ft)
OZ1000BW – OZ1000BWSS using 1/8" wire rope	7	74	140
OZ1000BW – OZ1000BWSS using 3/16" wire rope	5	34	75
OZ1500BW – OZ1500BWSS using 3/16" wire rope	7	66	140
OZ1500BW – OZ1500BWSS using 1/4" wire rope	5	27	89
OZ2000BW – OZ2000BWSS using 1/4" wire rope	8	36	85
OZ2000BW – OZ2000BWSS using 5/16" wire rope	7	22	52

Load Rating (lbs)			
OZ1000BW – OZ1000BWSS	1000	750	500
OZ1500BW – OZ1500BWSS	1500	1250	750
OZ2000BW – OZ2000BWSS	2000	1500	1000

*Cable not included - available see page 34

See page 34 for wire rope options

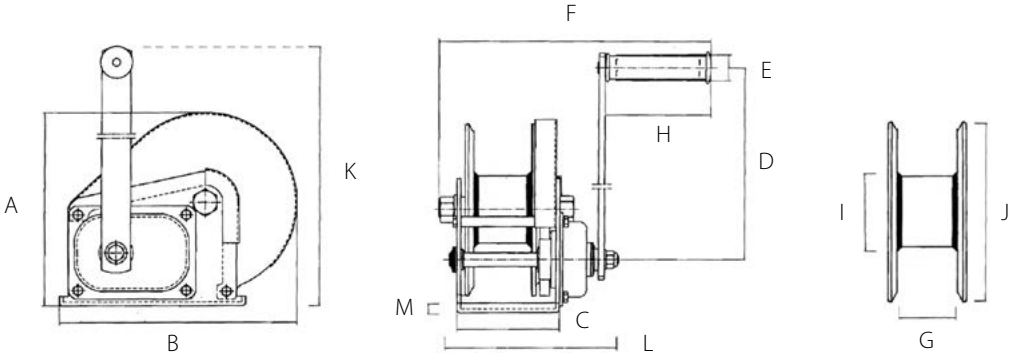

		OZ1000BW – OZ1000BWSS	OZ1500BW – OZ1500BWSS	OZ2000BW – OZ2000BWSS
Capacity (lbs)		1000	1500	2000
Gear Ratio		4.2:1	5:1	10:1
Dimensions (in)	A	6.22	7.73	8.35
	B	7.20	9.36	11.10
	C	3.46	4.21	5.00
	D	8.26	12.68	12.99
	E	1.06	1.06	1.06
	F	10.43	10.63	11.81
	G	1.98	2.30	2.52
	H	4.29	4.29	4.29
	I	1.90BW – 1.60BWSS	2.38	3.00
	J	5.33	7.00	7.09
	K	10.20	15.31	15.35
	L	5.98	6.89	7.87
	M	0.12	0.14	0.16
Net Weight (lbs)		8	17	22

Dimensions and illustrations are for reference only and subject to change without notice.





AC & DC ELECTRIC WINCHES

Features

- Two-braking system mechanical and dynamic
- Overload protection
- Fully-enclosed gearing
- Machine cut and hardened gears
- Lightweight
- CE rated
- Emergency handle
- Quick connection to davit
- Pendant and power cord included
- Easy bolt on winch to OZ davit cranes

Capacity

OZACW (115V AC): 1200 lbs.
OZDCW (12V DC): 1200 lbs.
Custom Overload Settings Available

Maximum Drum Capacity

3/16" diameter wire rope=90' lift
1/4" diameter wire rope=45' lift

Pendant/ Power Cord Length

115V AC: 10' Pendant / 10' Power Cord
12V DC: 10' Pendant / 25' Power Cord

Net Weight

OZACW – 22 lbs.
OZDCW – 24 lbs.

Motor Full Load AMPS

OZACW – 1.0 HP	OZACW – 10A
OZDCW – 0.6 HP	OZDCW – 70A

OVERLOAD PROTECTED

MADE IN USA

YouTube

OZACW



*Cable assemblies sold separately

OZDCW



Standard - CE

3 minutes of continuous use
15 minute cool down

*Cable assemblies sold separately

Load Capacity Based on the Amount of Cable	3/16" Cable	1/4" Cable
1st Layer (lbs)	800	1200
Mid. Drum (lbs)	800	1120
Full (lbs)	800	850

Winch Speed Based on Load & Cable on the Drum	First Layer	Full
AC, No Load (ft/min)	23	35
AC, Full Load (ft/min)	12	16
DC, No Load (ft/min)	21	33
DC, Full Load (ft/min)	5.5	8

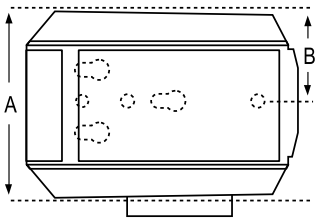

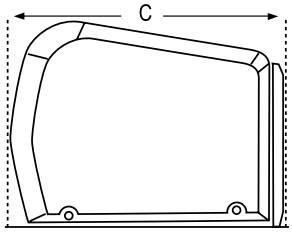

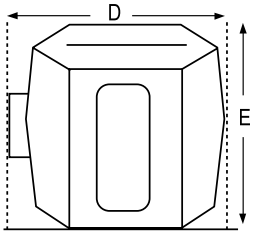

Dimensions – All Models (in)	
A	7.43
B	3.57
C	10.81
D	8.18
E	8.12

See page 34 for wire rope options

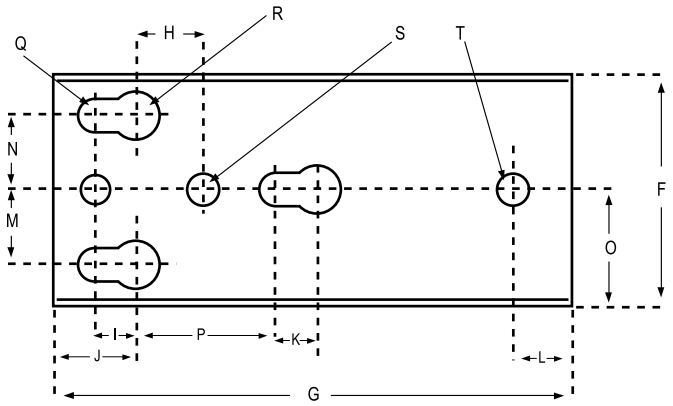

Mounting Plate

Mounting Plate Dimensions – All Models (in)					
F	3.62	K	.62	P	3
G	8.68	L	1	Q	.53
H	1.18	M	1.25	R	.78
I	.625	N	1.25	S	.42
J	1.37	O	1.81	T	.50

Dimensions and illustrations are for reference only and subject to change without notice.

TESTED USA

WARNING
CANCER AND REPRODUCTIVE HARM
Some products may contain chemicals known to the state of California to cause cancer, or birth defect or reproductive harm.
www.P65Warning.ca.gov

TELE-PRO® DAVIT CRANE

Individually tested and certified at 125%

OZTP500DAV, OZTP1200DAV, OZTP2500DAV

[PATENTED]



Shown with optional OZPED1-TP pedestal base and wire rope assembly

Bases and cable assemblies sold separately

MADE IN USA

TELE-PRO®



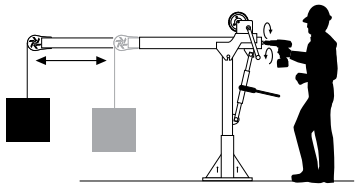

Telescoping boom can be adjusted using the winch handle or drill drive adapter

500 lbs., 1200 lbs. and 2500 lbs. Capacity

Features

- **Telescoping boom adjustment while under load**
- Ratchet screw jack adjusts boom under load
- 360 degree rotation of crane on sleeve bearing
- DIN-Rated hand winch equipped standard with a load holding weatherproof Weston brake (Cable assembly sold separately)
- Quick connect winch handle with power drill adapter included
- Smart Latch technology at boom/mast connection
- Corrosion resistant zinc plated finish
- Headache Ball (OZHB10) available and sold separately
- Carrying case (OZRB1) available and sold separately (excludes TP2500)

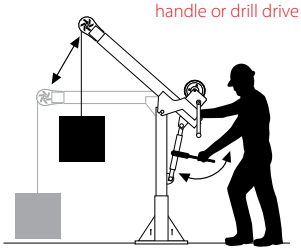

Ratchet screw jack adjusts boom under load

Weight (excludes winch weight)

Weight	Boom	Mast	Net
OZTP500DAV (lbs)	88	23	111
OZTP1200DAV (lbs)	102	36	138
OZTP2500DAV (lbs)	288	62	350

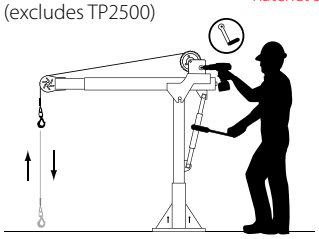

Detach winch handle for drill option

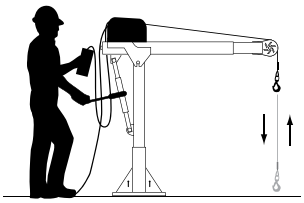

AC and DC power winches available See page 25

CABLE ASSEMBLIES (sold separately)

All cable assemblies come with swaged ball and swivel hook with latch. Custom cable length available.

Manual winch: 3/16" - 80 ft max. lift length • 1/4" - 55ft max. lift length
AC/DC Electric Winch: 3/16" - 90 ft max. lift length • 1/4" - 45ft max. lift length

See wire rope assembly page 34

OZTP500DAV DIMENSIONS

Horizontal and 45° Boom Position

w/ Socket Base

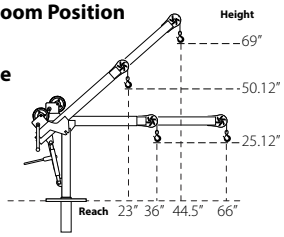

w/ Pedestal Base

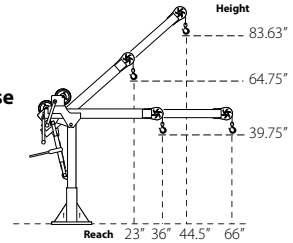

w/ Wall Mount

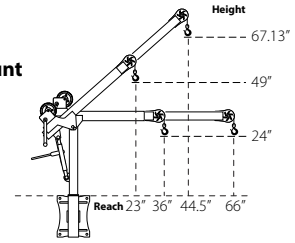

OZTP500DAV BASES (sold separately) **Base inside diameter 3.0" • Comes with mounting template.*

OZPED2-TP

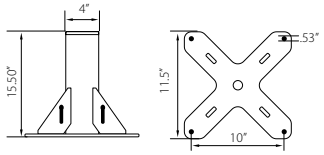

OZSOC2-TP

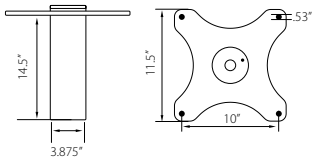

OZWALL2-TP

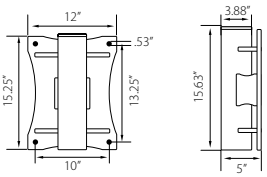

OZTP500DAV LOAD RATINGS – Horizontal Boom Angle

– Based on 3/16 inch wire/synthetic rope

Load Ratings (lbs.)	1st. Layer	Mid Drum	Full Drum
Boom Position 1 at 36"	500 lbs.	500 lbs.	500 lbs.
Boom Position 2 at 46"	430 lbs.	430 lbs.	430 lbs.
Boom Position 3 at 56"	350 lbs.	350 lbs.	350 lbs.
Boom Position 4 at 66"	300 lbs.	300 lbs.	300 lbs.

OZTP500DAV LOAD RATINGS – 45° Boom Angle

– Based on 3/16 inch wire/synthetic rope

Load Ratings (lbs.)	1st. Layer	Mid Drum	Full Drum
Boom Position 1 at 23"	500 lbs.	500 lbs.	500 lbs.
Boom Position 2 at 30"	500 lbs.	500 lbs.	500 lbs.
Boom Position 3 at 37"	500 lbs.	500 lbs.	500 lbs.
Boom Position 4 at 44"	450 lbs.	450 lbs.	450 lbs.

Load Rating are based on a manual winch. Load ratings will vary depending on wire or synthetic rope length and diameter.
Dimensions and illustrations are for reference only and subject to change without notice.

WARNING
CANCER AND REPRODUCTIVE HARM
Some products may contain chemicals known to the state of California to cause cancer, or birth defect or reproductive harm.
www.P65Warning.ca.gov

OZTP1200DAV DIMENSIONS
Horizontal and 45° Boom Position

w/ Socket Base

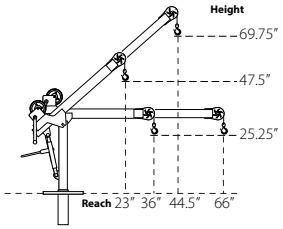

w/ Pedestal Base

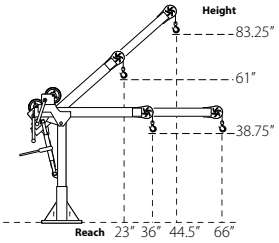

w/ Wall Mount

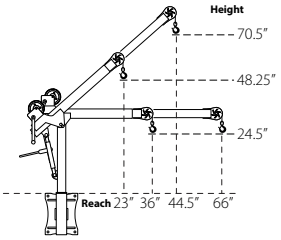

OZTP1200DAV BASES (sold separately) **Base inside diameter 3.5" • Comes with mounting template.*

OZPED1-TP

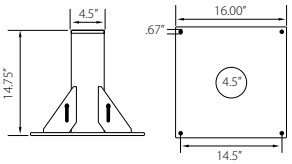

OZSOC1-TP

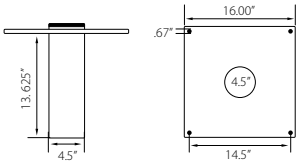

OZWALL1-TP

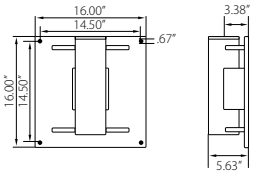

OZTP1200DAV LOAD RATINGS – Horizontal Boom Angle
– Based on 3/16 inch wire rope

Load Ratings (lbs.)	1st. Layer	Mid Drum	Full Drum
Boom Position 1 at 36"	800 lbs.	800 lbs.	550 lbs.
Boom Position 2 at 46"	800 lbs.	800 lbs.	550 lbs.
Boom Position 3 at 56"	750 lbs.	750 lbs.	550 lbs.
Boom Position 4 at 66"	650 lbs.	650 lbs.	550 lbs.

OZTP1200DAV LOAD RATINGS – Horizontal Boom Angle
– Based on 1/4 inch wire or 3/16 inch Ultrex synthetic rope

Load Ratings (lbs.)	1st. Layer	Mid Drum	Full Drum
Boom Position 1 at 36"	1200 lbs.	875 lbs.	550 lbs.
Boom Position 2 at 46"	900 lbs.	875 lbs.	550 lbs.
Boom Position 3 at 56"	750 lbs.	750 lbs.	550 lbs.
Boom Position 4 at 66"	650 lbs.	650 lbs.	550 lbs.

OZTP1200DAV LOAD RATINGS – 45° Boom Angle
– Based on 3/16 inch wire rope

Load Ratings (lbs.)	1st. Layer	Mid Drum	Full Drum
Boom Position 1 at 23"	800 lbs.	800 lbs.	550 lbs.
Boom Position 2 at 30.25"	800 lbs.	800 lbs.	550 lbs.
Boom Position 3 at 37.25"	800 lbs.	800 lbs.	550 lbs.
Boom Position 4 at 44.5"	800 lbs.	800 lbs.	550 lbs.

OZTP1200DAV LOAD RATINGS – 45° Boom Angle
– Based on 1/4 inch wire or 3/16 inch Ultrex synthetic rope

Load Ratings (lbs.)	1st. Layer	Mid Drum	Full Drum
Boom Position 1 at 23"	1200 lbs.	875 lbs.	550 lbs.
Boom Position 2 at 30.25"	1200 lbs.	875 lbs.	550 lbs.
Boom Position 3 at 37.25"	1100 lbs.	875 lbs.	550 lbs.
Boom Position 4 at 44.5"	950 lbs.	875 lbs.	550 lbs.

Load Rating are based on a manual winch • Load ratings will vary depending on wire or synthetic rope length and diameter.

OZTP2500DAV DIMENSIONS
Horizontal and 45° Boom Position

w/ Socket Base

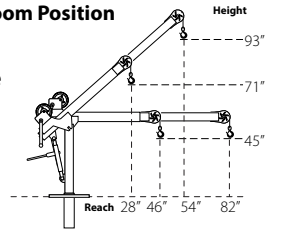

w/ Pedestal Base

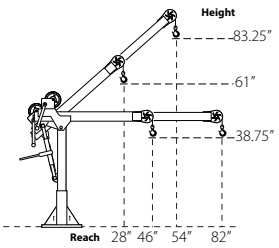

w/ Wall Mount

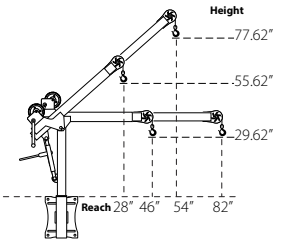

OZTP2500DAV BASES (sold separately) **Base inside diameter 4.5" • Comes with mounting template.*

OZPED4

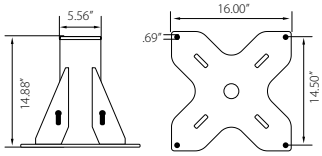

OZSOC4

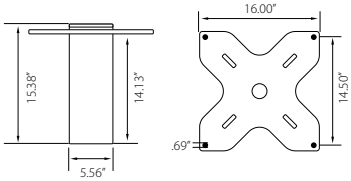

OZWALL4

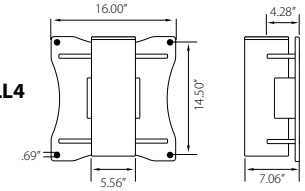

OZTP2500DAV LOAD RATINGS – Horizontal Boom Angle
– Based on 1/4 inch Ultrex synthetic rope

Load Ratings (lbs.)	1st. Layer	Mid Drum	Full Drum
Boom Position 1 at 46"	2000 lbs.	2000 lbs.	1550 lbs.
Boom Position 2 at 58"	1900 lbs.	1900 lbs.	1550 lbs.
Boom Position 3 at 70"	1600 lbs.	1600 lbs.	1550 lbs.
Boom Position 4 at 82"	1300 lbs.	1300 lbs.	1300 lbs.

OZTP2500DAV LOAD RATINGS – Horizontal Boom Angle
– Based on 3/8 inch wire/synthetic rope or 5/16 inch Ultrex synthetic rope

Load Ratings (lbs.)	1st. Layer	Mid Drum	Full Drum
Boom Position 1 at 46"	2500 lbs.	2015 lbs.	1550 lbs.
Boom Position 2 at 58"	1900 lbs.	1900 lbs.	1550 lbs.
Boom Position 3 at 70"	1600 lbs.	1600 lbs.	1550 lbs.
Boom Position 4 at 82"	1300 lbs.	1300 lbs.	1300 lbs.

OZTP2500DAV LOAD RATINGS – 45° Boom Angle
– Based on 1/4 inch Ultrex synthetic rope

Load Ratings (lbs.)	1st. Layer	Mid Drum	Full Drum
Boom Position 1 at 28"	2000 lbs.	2000 lbs.	1550 lbs.
Boom Position 2 at 37"	2000 lbs.	2000 lbs.	1550 lbs.
Boom Position 3 at 45.5"	2000 lbs.	2000 lbs.	1550 lbs.
Boom Position 4 at 54"	2000 lbs.	2000 lbs.	1550 lbs.

OZTP2500DAV LOAD RATINGS – 45° Boom Angle
– Based on 3/8 inch wire/synthetic rope or 5/16 inch Ultrex synthetic rope

Load Ratings (lbs.)	1st. Layer	Mid Drum	Full Drum
Boom Position 1 at 28"	2500 lbs.	2015 lbs.	1550 lbs.
Boom Position 2 at 37"	2500 lbs.	2015 lbs.	1550 lbs.
Boom Position 3 at 45.5"	2500 lbs.	2015 lbs.	1550 lbs.
Boom Position 4 at 54"	2000 lbs.	2000 lbs.	1550 lbs.

Load Rating are based on a manual winch • Load ratings will vary depending on wire or synthetic rope length and diameter.
Dimensions and illustrations are for reference only and subject to change without notice.

COMPOZITE® DAVIT CRANE

Individually tested and certified at 125%

OZ1200DAV (PATENTED]

MADE IN USA



Boom Weight 43lbs. (excluding winch)

Mast Weight 30lbs.

Crane weighs only 83 lbs. As Shown

One person set up. No tools required for installation. Portable ultra lightweight.

1200 lbs. Capacity

Features

- **Boom/Extension and Mast made of Advanced Composite Material**
- Light weight, about 40% lighter than steel
- Corrosion resistant
- Metal components mil-spec zinc plated
- External handle helps rotate crane under load
- 4 position boom
- Ratchet screw jack adjusts boom under load giving you infinite range of lift
- 360 degree rotation of crane on sleeve bearing
- No tools required for installation
- DIN-Rated hand winch equipped standard with a load holding weatherproof Weston brake (Cable assembly sold separately)
- Hand winch accepts two different cable termination points: swaged ball fitting or bare end cable
- Quick connect winch handle with power drill adapter included
- Smart Latch technology at boom/mast connection
- Headache Ball (OZHB10) available and sold separately
- Carrying case (OZRB1) available and sold separately

Options for faster lowering and raising

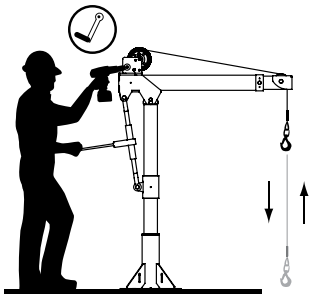

Detach winch handle for drill option

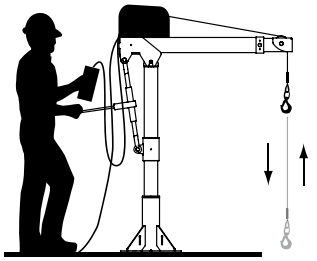

AC and DC power winches available
See page 25

Weight

Weight	Boom	Mast	Net
OZ1200DAV (lbs)	43	30	73

Shown with optional OZPED1 Pedestal base and wire rope assembly
Bases and cable assemblies sold separately

CABLE ASSEMBLIES (sold separately)
All cable assemblies come with swaged ball and swivel hook with latch. Custom cable length available.

Manual winch: 3/16" - 80 ft max. lift length • 1/4" - 55ft max. lift length
AC/DC Electric Winch: 3/16" - 90 ft max. lift length • 1/4" - 45ft max. lift length
See wire rope assembly page 34

OZ1200DAV BASES (sold separately) **Base inside diameter 3.6" • Comes with mounting template.*

OZPED1

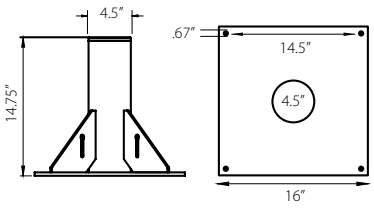

OZSOC1

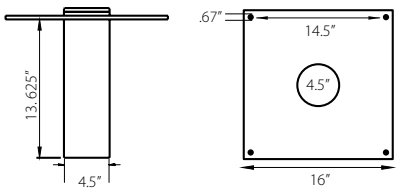

OZWALL1

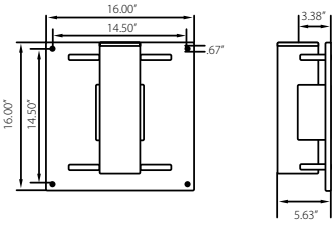

Dimensions and illustrations are for reference only and subject to change without notice.

YouTube

WARNING
CANCER AND REPRODUCTIVE HARM
Some products may contain chemicals known to the state of California to cause cancer, or birth defect or reproductive harm.
www.P65Warning.ca.gov

OZ1200DAV DIMENSIONS Dimensions are for reference only and subject to change without notice.

w/ Socket Base

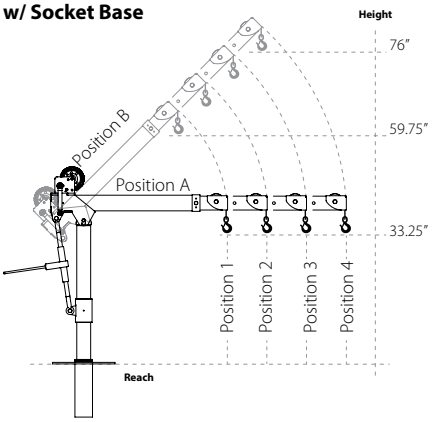

Boom Horizontal Position (A)
Boom Position 1: Reach 36″
Boom Position 2: Reach 46″
Boom Position 3: Reach 56″
Boom Position 4: Reach 66″

Boom 45° Position (B)
Boom Position 1: Reach 22″
Boom Position 2: Reach 29″
Boom Position 3: Reach 36″
Boom Position 4: Reach 43″

w/ Pedestal Base

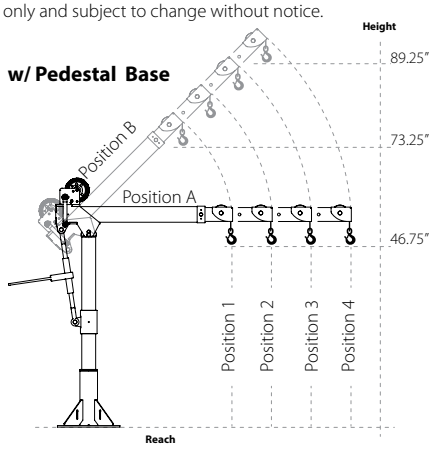

Boom Horizontal Position (A)
Boom Position 1: Reach 36″
Boom Position 2: Reach 46″
Boom Position 3: Reach 56″
Boom Position 4: Reach 66″

Boom 45° Position (B)
Boom Position 1: Reach 22″
Boom Position 2: Reach 29″
Boom Position 3: Reach 36″
Boom Position 4: Reach 43″

w/ Wall Mount

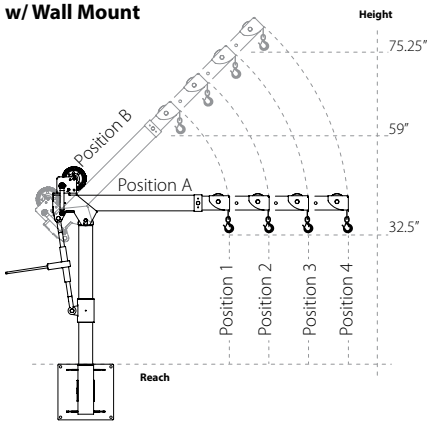

Boom Horizontal Position (A)
Boom Position 1: Reach 36″
Boom Position 2: Reach 46″
Boom Position 3: Reach 56″
Boom Position 4: Reach 66″

Boom 45° Position (B)
Boom Position 1: Reach 22″
Boom Position 2: Reach 29″
Boom Position 3: Reach 36″
Boom Position 4: Reach 43″

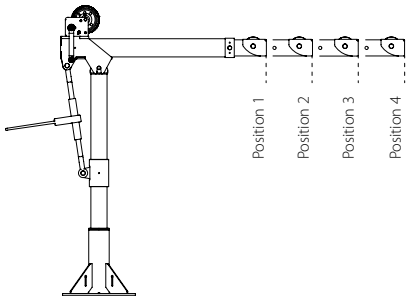

Load Ratings OZ1200DAV

*Table based on 1/4 inch wire rope. 3/16″ cable will be lower.

Load Ratings	1st. Layer	Mid. Drum	Full Drum
Position 1 (lbs)	1200	875	550
Position 2 (lbs)	900	875	550
Position 3 (lbs)	700	700	550
Position 4 (lbs)	400	400	400

3/16″Cable (ft)	Boom Position 1 (lbs)	Boom Position 2 (lbs)	Boom Position 3 (lbs)	Boom Position 4 (lbs)
6	800	800	700	400
14	800	800	700	400
22	800	800	700	400
31	800	800	700	400
41	775	775	700	400
52	725	725	700	400
64	650	650	650	400
77	625	625	625	400
90	550	550	550	400

1/4″ Cable (ft)	Boom Position 1 (lbs)	Boom Position 2 (lbs)	Boom Position 3 (lbs)	Boom Position 4 (lbs)
4	1200	900	700	400
9	1025	900	700	400
14	875	875	700	400
20	775	775	700	400
27	700	700	700	400
35	625	625	625	400
43	575	575	575	400
50	550	550	550	400

Designed for use in multiple workstations. Buy one crane and multiple bases.

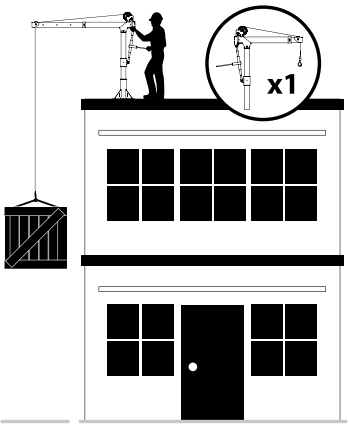

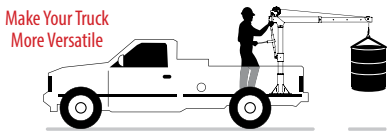

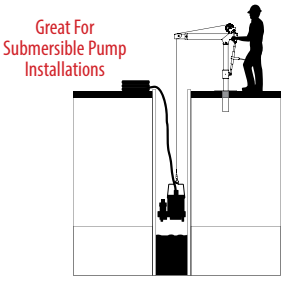

STEEL DAVIT CRANE

Individually tested and certified at 125%

OZ500DAV, OZ1200DAV, OZ2500DAV

MADE IN USA

OZ STEEL DAVIT



500 lbs., 1000 lbs. and 2500 lbs. Capacity

Features

- 360 degree rotation
- 4 different boom height adjustments
- 500, 1000, and 2500 lb. ratings available
- Manual Din rated CE winch with brake (Includes power drill adaptor)
- Zinc plated finish
- Headache Ball (OZHB10) available and sold separately
- Carrying case (OZRB1) available and sold separately

Options for faster lowering and raising

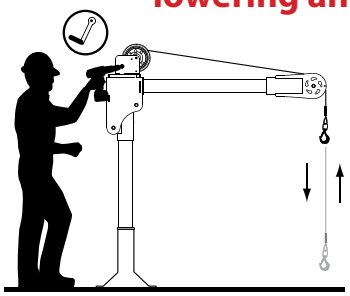

Detach winch handle for drill option

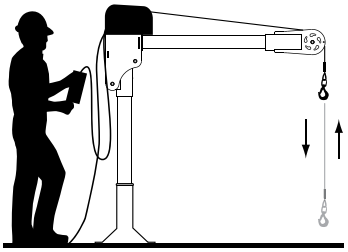

AC and DC power winches available
See page 25

Weight

Weight	Boom	Mast	Net
OZ500DAV (lbs)	27	23	50
OZ1000DAV (lbs)	35	29	64
OZ2500DAV (lbs)	130	64	194

Load Ratings

*OZ500DAV based on 3/16" wire rope
*OZ1000DAV based on 1/4" wire rope
*OZ2500DAV based on 3/8" synthetic rope

	1st. Layer	Mid. Drum	Full Drum
OZ500DAV (lbs)	500	500	500
OZ1000DAV (lbs)	1000	875	550
OZ2500DAV (lbs)	2500	2000	1550

Shown with optional OZPED2 Pedestal base and wire rope assembly
Bases and cable assemblies sold separately

CABLE ASSEMBLIES (sold separately)
All cable assemblies come with swaged ball and swivel hook with latch. Custom cable length available.

Manual winch: 3/16" - 80 ft max. lift length • 1/4" - 55ft max. lift length
AC/DC Electric Winch: 3/16" - 90 ft max. lift length • 1/4" - 45ft max. lift length
See wire rope assembly page 34

OZ500DAV DIMENSIONS

w/ Socket Base

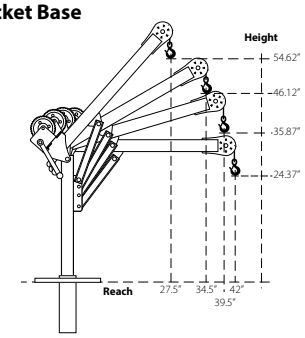

w/ Pedestal Base

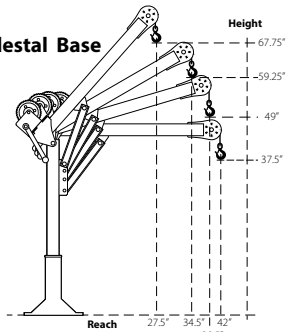

w/ Wall Mount

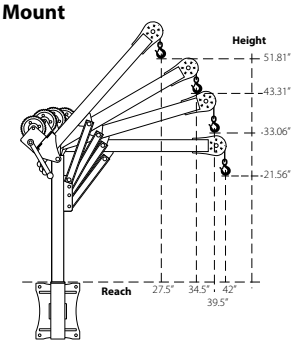

Dimensions and illustrations are for reference only and subject to change without notice.

MADE
TESTED USA

YouTube

WARNING
CANCER AND REPRODUCTIVE HARM
Some products may contain chemicals known to the state of California to cause cancer, or birth defect or reproductive harm.
www.P65Warning.ca.gov

OZ500DAV BASES (sold separately) **Base inside diameter 3.0" • Comes with mounting template.*

OZPED3

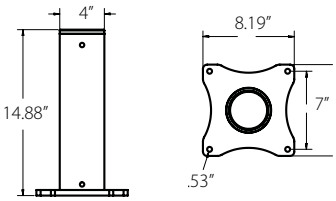

OZSOC3

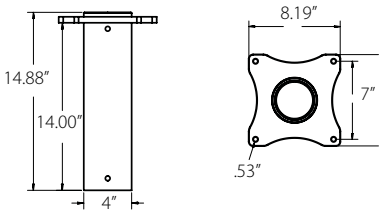

OZWALL3

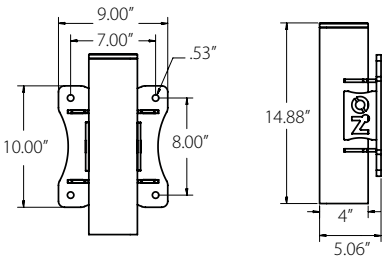

OZ21000DAV DIMENSIONS

w/ Socket Base

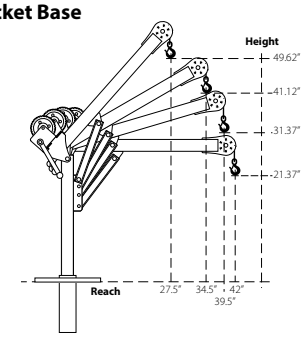

w/ Pedestal Base

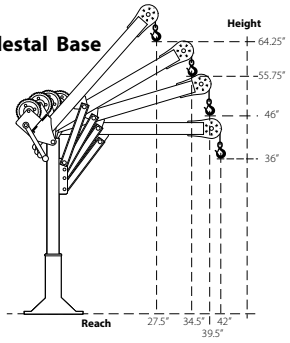

w/ Wall Mount

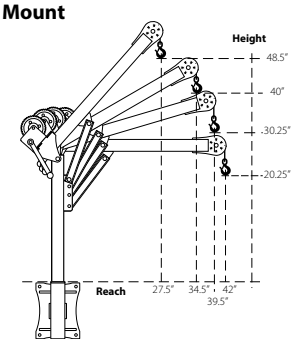

OZ1000DAV BASES (sold separately) **Base inside diameter 3.0" • Comes with mounting template.*

OZPED2

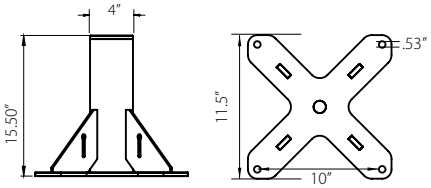

OZSOC2

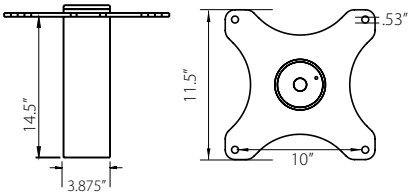

OZWALL2

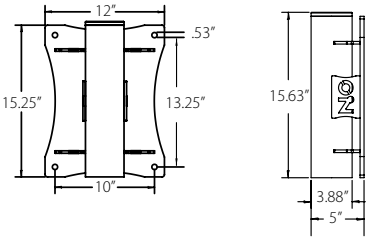

OZ2500DAV DIMENSIONS

w/ Socket Base

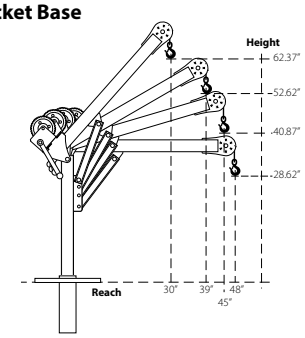

w/ Pedestal Base

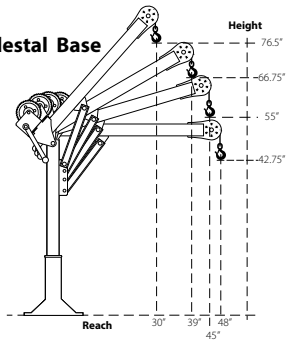

w/ Wall Mount

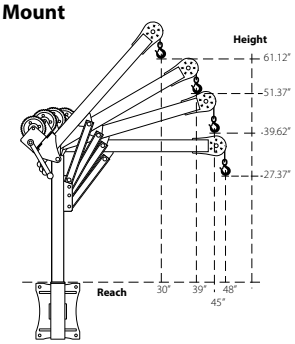

OZ2500DAV BASES (sold separately) **Base inside diameter 4.5" • Comes with mounting template.*

OZPED4

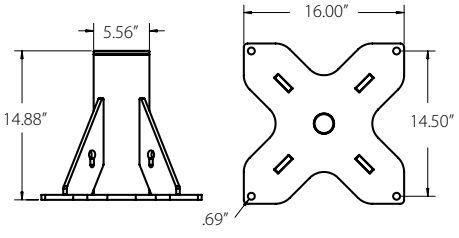

OZSOC4

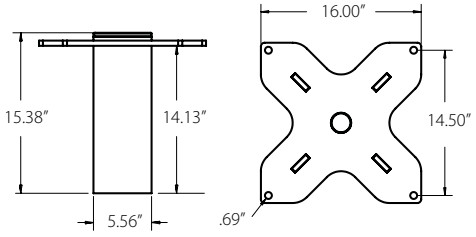

OZWALL4

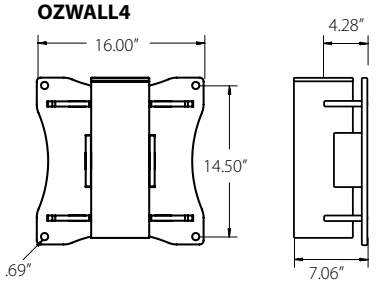

Dimensions and illustrations are for reference only and subject to change without notice.

COMPOZITE ELITE® DAVIT CRANE

Individually tested and certified at 125%

OZCF1200DAV



Shown with optional OZPED2 Pedestal base and wire rope assembly
Bases and cable assemblies sold separately

MADE IN USA

COMPOZITE-ELITE®

Options for faster lowering and raising

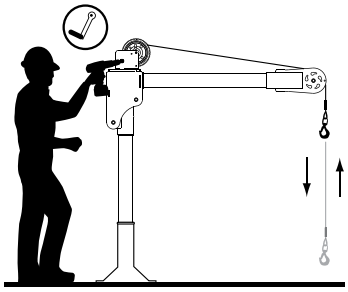

Detach winch handle for drill option

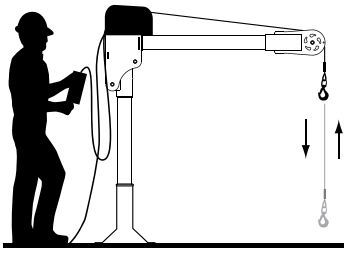

AC and DC power winches available
See page 25

1200 lbs. Capacity

Features

- Carbon fiber / High-strength aluminum construction
- Corrosion Resistant Finish
- Truly Portable Design
- One-Person Assembly (No Tools Needed)
- Manual Din rated CE winch with brake (Includes power drill adaptor)
- Synthetic Cable Assembly Available
- Headache Ball (OZHB10) available and sold separately
- Carrying case (OZRB1) available and sold separately

Weight

Weight	Boom	Mast	Net
OZFC1200DAV (lbs)	18	13	31

Load Ratings (lbs.)

*OZCF1200DAV based on 1/4" wire rope

	1st. Layer	Mid. Drum	Full Drum
Position 1 (0°)	500	500	500
Position 2 (+22.5°)	700	700	550
Position 3 (+45°)	1200	875	550

CABLE ASSEMBLIES (sold separately)
All cable assemblies come with swaged ball and swivel hook with latch. Custom cable length available.

Manual winch: 3/16" - 80 ft max. lift length • 1/4" - 55ft max. lift length
AC/DC Electric Winch: 3/16" - 90 ft max. lift length • 1/4" - 45ft max. lift length
See wire rope assembly page 34

OZCF1200DAV DIMENSIONS

w/ Socket Base

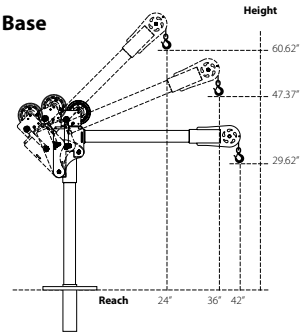

w/ Pedestal Base

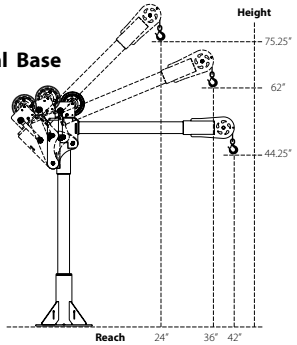

w/ Wall Mount

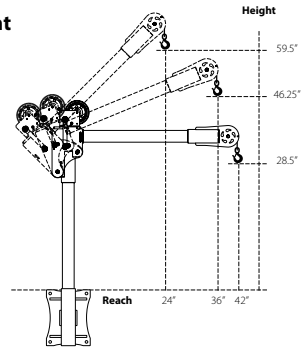

OZCF1200DAV BASES (sold separately) *Base inside diameter 3.0" • Comes with mounting template.*

OZPED2

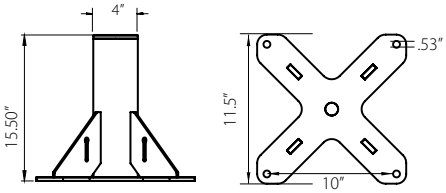

OZSOC2

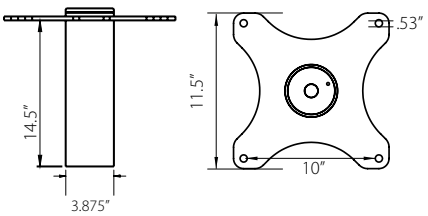

OZWALL2

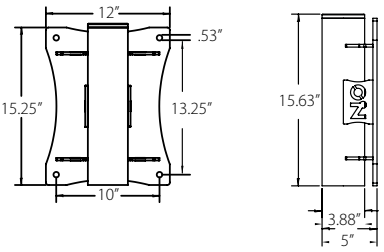

Dimensions and illustrations are for reference only and subject to change without notice.

WARNING
CANCER AND REPRODUCTIVE HARM
Some products may contain chemicals known to the state of California to cause cancer, or birth defect or reproductive harm.
www.P65Warning.ca.gov

APPLICATION DATA SHEET | DAVIT CRANES

Date: _____

P.O. Box 845 Winona, MN 55987 • Tf: (800) 749-1064 • Ph: (507) 474-6250 • Fax: (507) 452-5217 • sales@ozliftingproducts.com

Company Name: _____ Contact Name: _____

Email Address: _____

Phone: _____ Fax: _____

Address: _____ City: _____ State: _____ Zip Code: _____

1. JOB DESCRIPTION:

_____

_____

2. WEIGHT OF LOAD:

_____

3. HOW FAR IS THE LOAD MOVING?

_____

4. REACH REQUIREMENTS:

_____

5. WHAT CAPACITY DO YOU NEED AND WHAT REACH?

_____

6. HEIGHT REQUIREMENTS:

_____

7. WINCH REQUIREMENTS:

[ ] Hand [ ] 115 Volt AC [ ] 12 Volt DC

_____

8. BASE REQUIREMENTS:

[ ] Pedestal [ ] Socket [ ] Wall Mount
[ ] Base Extension

9. WHERE IS THE DAVIT CRANE BEING USED?

_____

_____

10. HOW DID YOU HEAR OF US?

_____

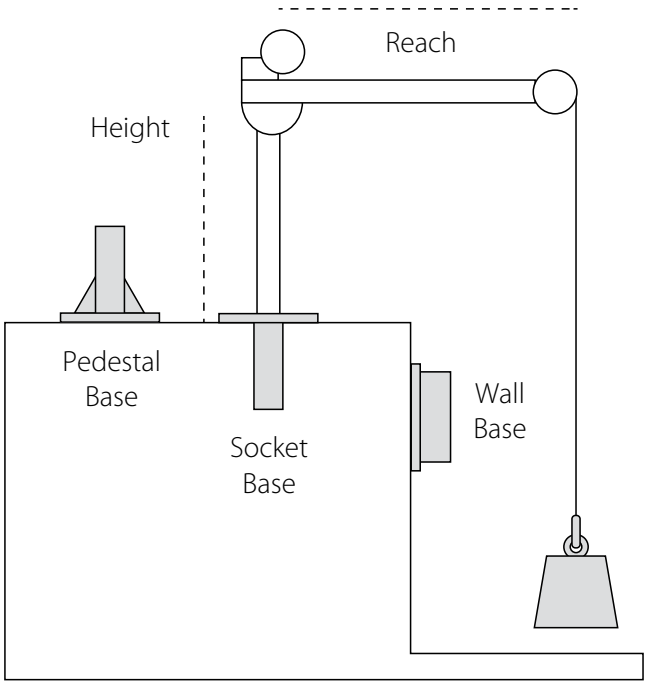

Purchaser is responsible for proper base installation. Consulting with a civil engineer or qualified professional is highly recommended.

Each crane is tested at 125%.
Test cert included. Cable and base sold separately.

OZ Lifting products are not for lifting up people or objects over people.

Load ratings may vary depending on position of boom, wire rope length and winch used.



800.749.1064
ozliftingproducts.com



Corporate Office:
OZ Lifting Products
5455 W 6th St.
Goodview, MN 55987
Tf: (800) 749-1064

Sales/Tech Support:
Ph: (507) 474-6250
Tf: (800) 749-1064
Fx: (507) 452-5217
sales@ozliftingproducts.com

Email Orders to:
sales@ozliftingproducts.com

Payment Remit to:
OZ Lifting Products
P.O. Box 845
Winona, MN 55987