NIKO
Jib Cranes

NIKO ... Quality in Motion



smak
Industrial Handling Solutions

SmakHandling.com

1.844.841.2288

www.niko.eu.com
www.niko.co.uk
www.nikotrack.com
www.niko.world

NIKO Jib Cranes

NIKO manufactures and supplies a wide range of different types of jib cranes, that can be freestanding, clamp around an existing column or bolt directly onto a wall.

Comprising of various arm types, NIKO jib cranes are built to customer requirements to ensure they fully satisfy the customers lifting requirements.

Features

- ✓ SWL: 80 - 2000kg
- ✓ Arm length: up to 6m
- ✓ Column height: up to 5m
- ✓ Arm types: profile track, under-braced I-beam, over-braced I-beam and articulated/knuckle
- ✓ Fixing: freestanding, wall fixing, clamp around column fixing
- ✓ Slewing arc: 270° on standard arms or 360° on articulated arms
- ✓ Finish: powder coated, zinc plated, hot dip galvanised or stainless steel

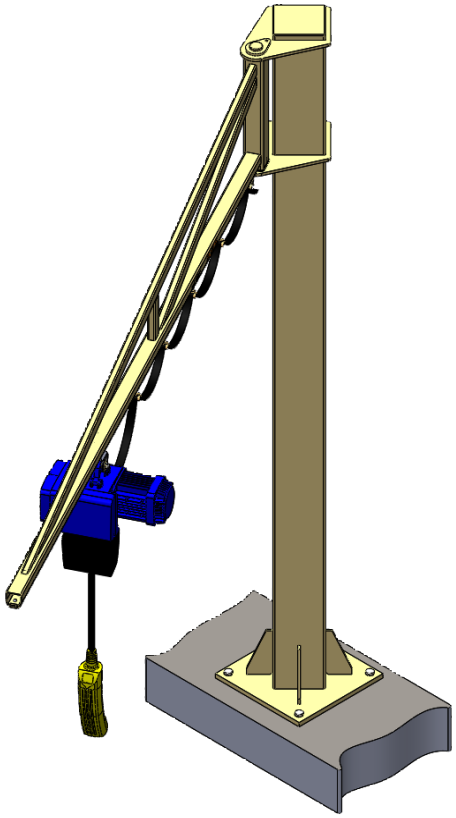

Advantages

- ✓ Made to order, no costs for excess steel or cutting
- ✓ Free and easy to operate
- ✓ Low maintenance
- ✓ Lubrication-free bearings used on majority of jib arms
- ✓ Base fabricated directly to pillar and therefore expensive foundation frames are not required

Ver. April 2022

SmakHandling.com
1.844.841.2288

Over-braced (OB) Profile Jib cranes

In OB Profile Jib cranes the bracings are located above our NIKO track profile. This type is the most free running along the arm length and therefore is generally the easiest type for the operator to use.

Freestanding Jib crane

NIKO freestanding jib cranes are supplied in kit form and comprise of 2 main parts: the pillar and the arm. The pillars are designed and fabricated to suspend the required jib arm type. The arm is fixed to the column using a pivot pin. The arm then rotates around the pillar and enables lifting within a predetermined arc.

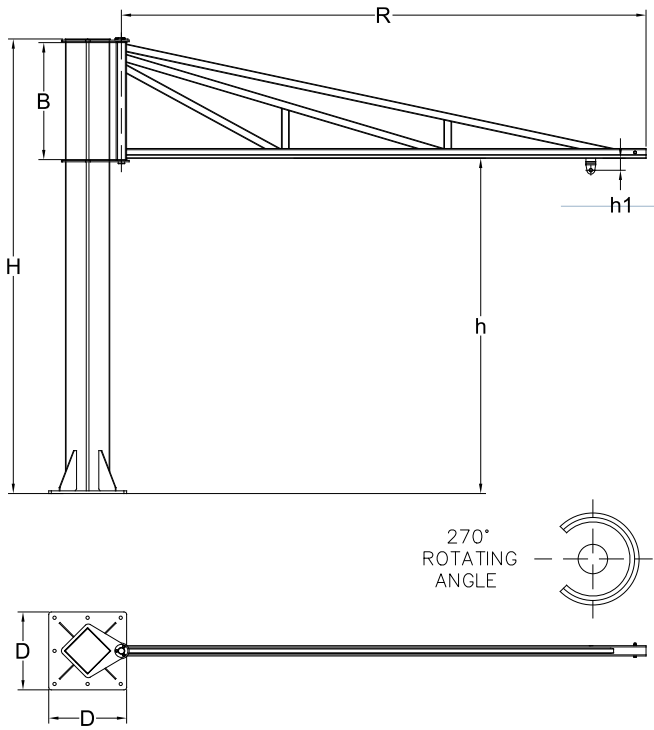

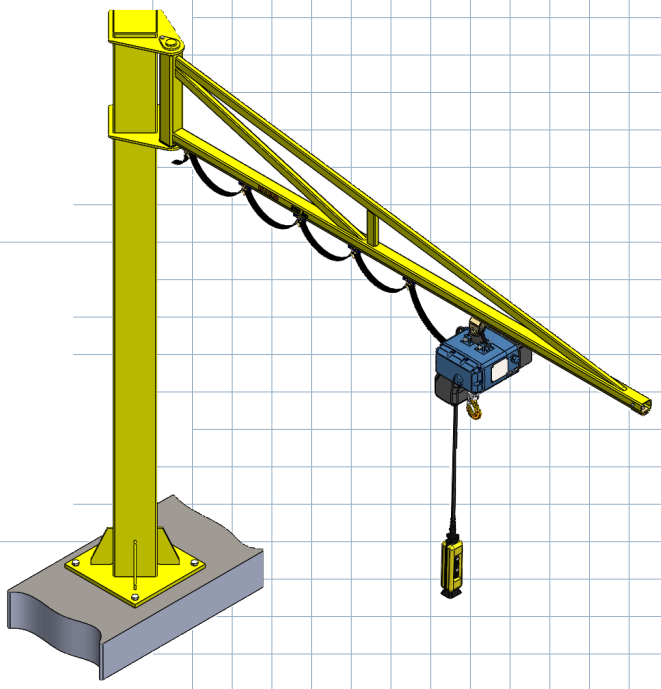

SWL [Kg]	Freestanding OB Profile	Radius R [m]	NIKO Track Profile	Kingpin Height B [mm]	Trolley Depth h1 [mm]	Overall Height H [mm]	Height to Under Arm h [mm]	Base Size D [mm] *
80	24.J053.K30	3	24.000	500	65	3000	2470	450
	24.J064.K30	4	24.000	600	65	3000	2370	450
	24.J095.K30	5	24.000	900	65	3000	2070	450
	25.J096.K30	6	25.000	900	77	3000	2070	600
125	25.J053.K30	3	25.000	500	77	3000	2470	450
	25.J064.K30	4	25.000	600	77	3000	2370	450
	25.J095.K30	5	25.000	900	77	3000	2070	600
	25.J106.K30	6	25.000	1000	77	3000	1970	600
250	25.J063.K30	3	25.000	600	77	3000	2370	450
	25.J084.K30	4	25.000	800	77	3000	2170	600
	26.J095.K30	5	26.000	900	94	3000	2070	600
	26.J106.K30	6	26.000	1000	94	3000	1970	700
500	26.J083.K35	3	26.000	800	94	3500	2670	600
	26.J094.K35	4	26.000	900	94	3500	2570	600
	27.J105.K35	5	27.000	1000	123	3500	2470	700
	27.J116.K35	6	27.000	1100	123	3500	2370	700
1000	27.J093.K35	3	27.000	900	123	3500	2570	700
	27.J104.K35	4	27.000	1000	123	3500	2470	700

** Columns are available up to 5 metres upon request. Jib cranes are supplied painted.*

SmakHandling.com
1.844.841.2288

Clamp around Column Mounted Jib Cranes

NIKO column mounted jib cranes comprise of an arm and a pair of brackets that can be clamped around an existing building column/stanchion/pillar. The support structure must be tested by a structural engineer to ensure it is strong enough to sustain the weight of the jib when loaded. The arm is then located between the pair of clamping brackets and fixed using a pivot pin. The arm then rotates around the support column and enables lifting within a predetermined arc. Anti-slip measures must be taken to ensure that the jib crane cannot slip down the support column.

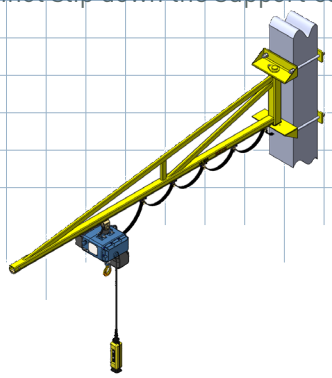

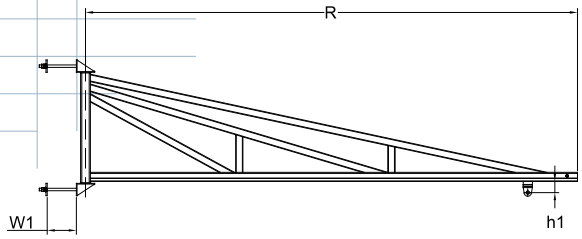

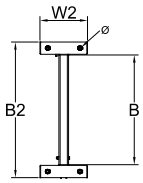

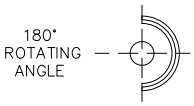

Wall Mounted Jib crane

NIKO wall mounted jib cranes comprise of an arm and a pair of brackets that can be bolted or welded to an existing wall or building column/stanchion/pillar. The support structure must be tested by a structural engineer to ensure it is strong enough to sustain the weight of the jib when loaded. The arm is then located between the pair of clamping brackets and fixed using a pivot pin. The arm then rotates around the support column and enables lifting within a predetermined arc.

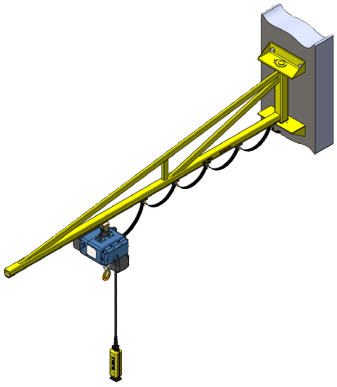

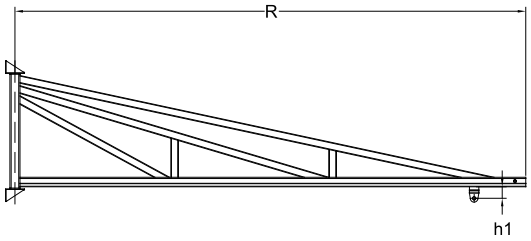

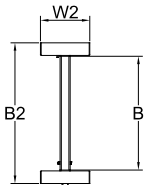

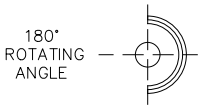

SWL [Kg]	Column Mounted	Wall Mounted	Radius R [m]	NIKO Track Profile	Kingpin Height B [mm]	Trolley Depth h1 [mm]	Overall Height B2 [mm]	Bracket Width W2 [mm]	Max Column Width W1 [mm]	Bolt Size Ø
80	24.J053.C	24.J053	3	24.000	500	65	720	380	500	M20
	24.J064.C	24.J064	4	24.000	600	65	820	380	500	M20
	24.J095.C	24.J095	5	24.000	900	65	1120	380	500	M20
	25.J096.C	25.J096	6	25.000	900	77	1120	380	500	M20
125	25.J053.C	25.J053	3	25.000	500	77	720	380	500	M20
	25.J064.C	25.J064	4	25.000	600	77	820	380	500	M20
	25.J095.C	25.J095	5	25.000	900	77	1120	380	500	M20
	25.J106.C	25.J106	6	25.000	1000	77	1220	380	500	M20
250	25.J063.C	25.J063	3	25.000	600	77	820	380	500	M20
	25.J084.C	25.J084	4	25.000	800	77	1020	380	500	M20
	26.J095.C	26.J095	5	26.000	900	94	1120	380	500	M20
	26.J106.C	26.J106	6	26.000	1000	94	1220	380	500	M20
500	26.J083.C	26.J083	3	26.000	800	94	1020	380	500	M20
	26.J094.C	26.J094	4	26.000	900	94	1120	380	500	M20
	27.J105.C	27.J105	5	27.000	1000	123	1220	380	500	M20
	27.J116.C	27.J116	6	27.000	1100	123	1320	380	500	M20
1000	27.J093.C	27.J093	3	27.000	900	123	1120	380	500	M20
	27.J104.C	27.J104	4	27.000	1000	123	1220	380	500	M20

Jib cranes are supplied painted.

Ver. April 2022

SmakHandling.com
1.844.841.2288

Under-braced (UB) I-beam Jib cranes

I-Beam Jib Cranes are generally used when powered travel is required along the arm. Under-braced I-beam jib cranes, are braced below the arm onto the underside of an I-beam. These are the lowest headroom variation and therefore are normally used in areas where headroom is limited.

Freestanding Jib crane

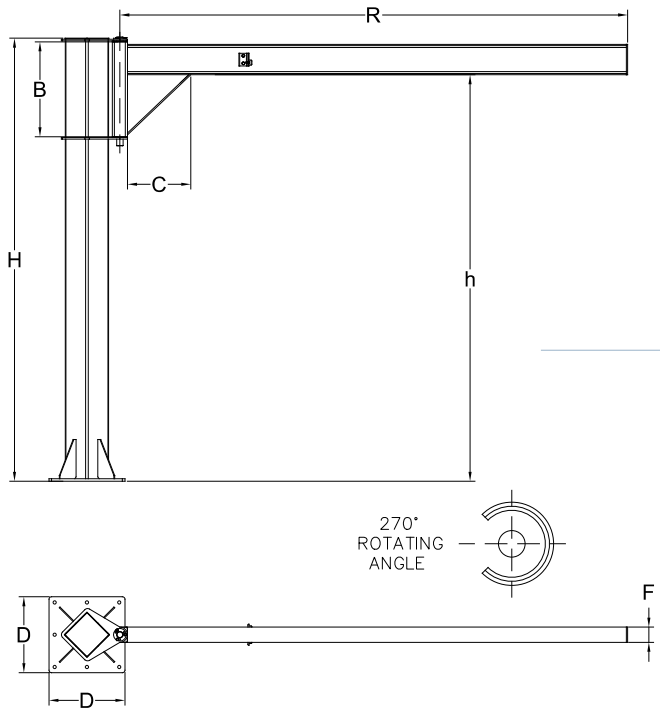

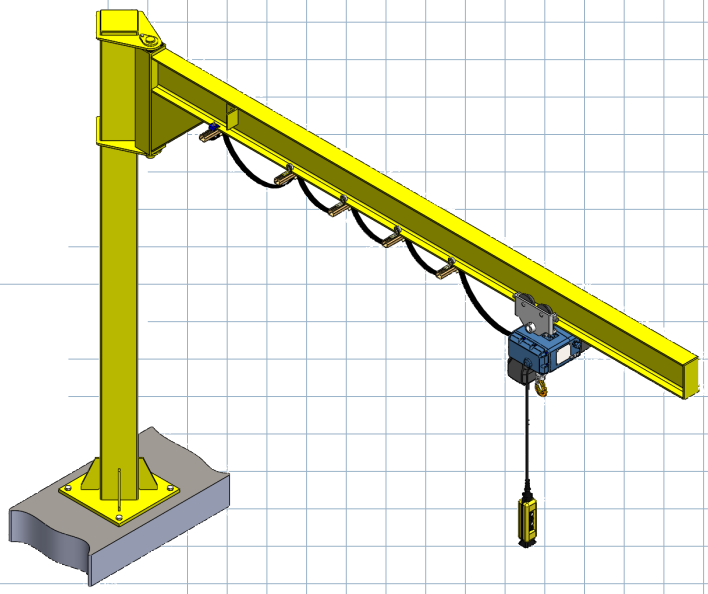

SWL [Kg]	Freestanding UB I-BEAM	Radius R [m]	Flange Width F [mm]	Kingpin Height B [mm]	Underbracing Length C [mm]	Overall Height H [mm]	Height to Under Arm h [mm]	Base Size D [mm] *
80	160.U053.K30.0080	3	91	500	320	3000	2780	450
	180.U064.K30.0080	4	91	600	320	3000	2760	450
	180.U095.K30.0080	5	100	900	400	3000	2760	600
	220.U096.K30.0080	6	100	900	400	3000	2720	600
125	160.U053.K30.0125	3	91	500	320	3000	2780	450
	180.U064.K30.0125	4	100	600	400	3000	2760	600
	200.U095.K30.0125	5	100	900	500	3000	2740	600
	240.U106.K30.0125	6	120	1000	500	3000	2700	600
250	200.U0753.K30.0250	3	100	750	400	3000	2740	450
	220.U084.K30.0250	4	120	800	400	3000	2720	600
	240.U095.K30.0250	5	120	900	500	3000	2700	600
	270.U106.K30.0250	6	135	1000	550	3000	2670	700
500	240.U083.K30.0500	3	120	800	500	3000	2700	600
	270.U094.K30.0500	4	135	900	500	3000	2670	700
	300.U105.K30.0500	5	170	1000	500	3000	2640	700
	360.U116.K30.0500	6	180	1100	600	3000	2580	850
1000	300.U093.K30.1000	3	135	900	450	3000	2640	700
	360.U104.K30.1000	4	170	1000	500	3000	2580	700
	360.U145.K35.1000	5	170	1400	600	3500	3140	850
	400.U156.K35.1000	6	180	1500	600	3500	3100	850
1600**	330.U113.K35.1600	3	160	1100	500	3500	3170	850
	360.U144.K35.1600	4	170	1400	600	3500	3140	1000
	400.U155.K35.1600	5	180	1500	650	3500	3100	1000
2000**	360.U113.K35.2000	3	170	1100	550	3500	3140	1000
	400.U144.K35.2000	4	180	1400	650	3500	3100	1000
	450.U155.K35.2000	5	190	1500	650	3500	3050	1200

** Columns are available up to 5 metres upon request. Jib cranes are supplied painted.*

** *Dimension may vary in case of order*

SmakHandling.com
1.844.841.2288

B. Clamp around Column Mounted Jib Cranes

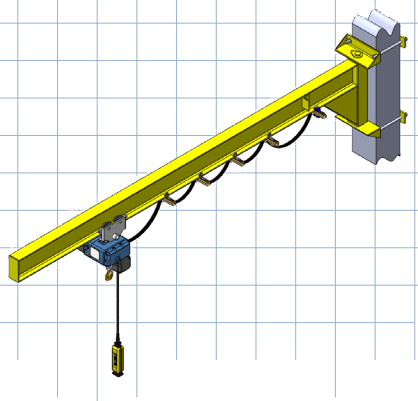

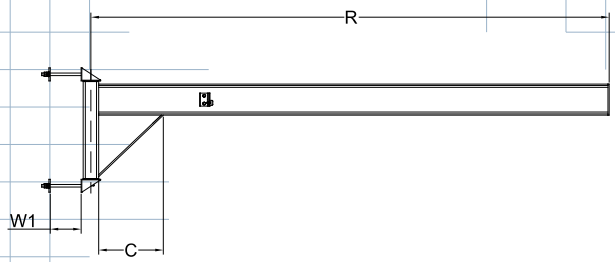

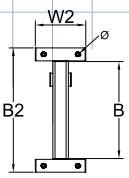

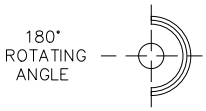

C. Wall Mounted Jib crane

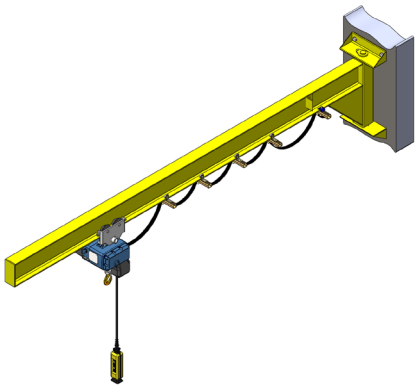

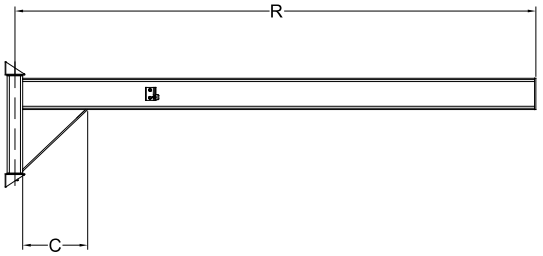

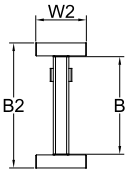

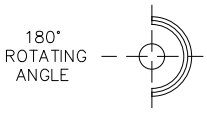

SWL [Kg]	Column Mounted	Wall Mounted	Radius R [m]	Flange Width F [mm]	Kingpin Height B [mm]	Underbracing Length C [mm]	Overall Height B2 [mm]	Bracket Width W2 [mm]	Max Column Width W1 [mm]	Bolt Size Ø
80	160.U053.C.0080	160.U053.0080	3	91	500	320	720	380	500	M20
	180.U064.C.0080	180.U064.0080	4	91	600	320	820	380	500	M20
	180.U095.C.0080	180.U095.0080	5	100	900	400	1120	380	500	M20
	220.U095.C.0080	220.U096.0080	6	100	900	400	1120	380	500	M20
125	160.U053.C.0125	160.U053.0125	3	91	500	320	720	380	500	M20
	180.U064.C.0125	180.U064.0125	4	100	600	400	820	380	500	M20
	200.U095.C.0125	200.U095.0125	5	100	900	500	1120	380	500	M20
	240.U106.C.0125	240.U106.0125	6	120	1000	500	1220	380	500	M20
250	200.U0753.C.0250	200.U0753.0250	3	100	750	400	970	380	500	M20
	220.U084.C.0250	220.U084.0250	4	120	800	400	1020	380	500	M20
	240.U095.C.0250	240.U095.0250	5	120	900	500	1120	380	500	M20
	270.U106.C.0250	270.U106.0250	6	135	1000	550	1220	380	500	M20
500	240.U083.C.0500	240.U083.0500	3	120	800	500	1020	380	500	M20
	270.U094.C.0500	270.U094.0500	4	135	900	500	1120	380	500	M20
	300.U105.C.0500	300.U105.0500	5	170	1000	500	1220	380	500	M20
	360.U116.C.0500	360.U116.0500	6	180	1100	600	1320	380	500	M20
1000	300.U093.C.1000	300.U093.1000	3	135	900	450	1120	380	500	M20
	360.U104.C.1000	360.U104.1000	4	170	1000	500	1220	380	500	M20
	360.U145.C.1000	360.U145.1000	5	170	1400	600	1530	380	500	M20
	400.U156.C.1000	400.U156.1000	6	180	1500	600	1630	380	500	M24
1600*	330.U113.C.1600	330.U113.1600	3	160	1100	500	1430	380	500	M20
	360.U144.C.1600	360.U144.1600	4	170	1400	600	1730	380	500	M20
	400.U155.C.1600	400.U155.1600	5	180	1500	650	1830	380	500	M24
	450.U166.C.1600	450.U166.1600	6	190	1600	650	1930	380	500	M24
2000*	360.U113.C.2000	360.U113.2000	3	170	1100	550	1430	380	500	M24
	400.U144.C.2000	400.U144.2000	4	180	1400	650	1730	380	500	M24
	450.U155.C.2000	450.U155.C.2000	5	190	1500	650	1830	380	500	M24
	500.U206.C.2000	500.U206.2000	6	200	2000	700	2330	380	500	M24

Jib cranes are supplied painted.

** Dimension may vary in case of order*

Ver. April 2022

SmakHandling.com
1.844.841.2288

Over-braced (OB) I-beam Jib cranes

Over-braced I-beam jib cranes are braced the same as profile arms, but with an I-beam underneath rather than a NIKO track profile. These are generally used when powered travel is required along the arm.

A. Freestanding Jib crane

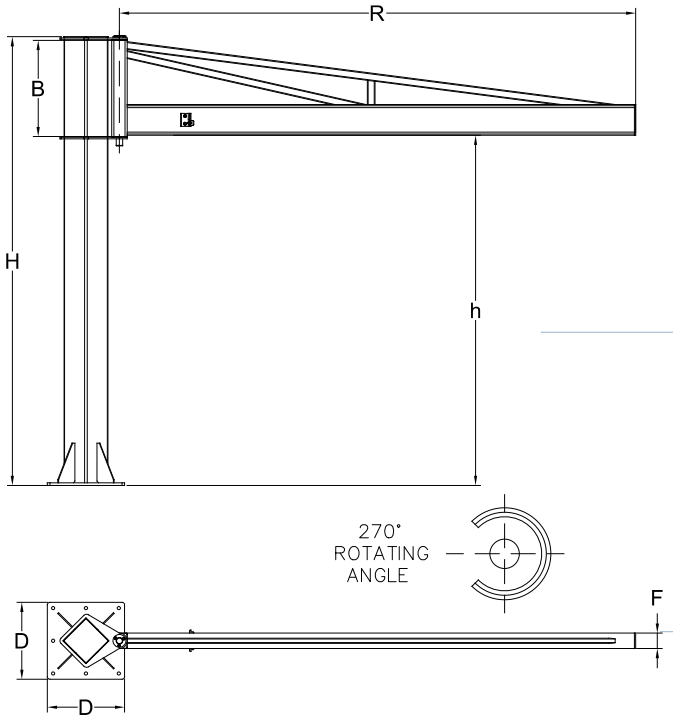

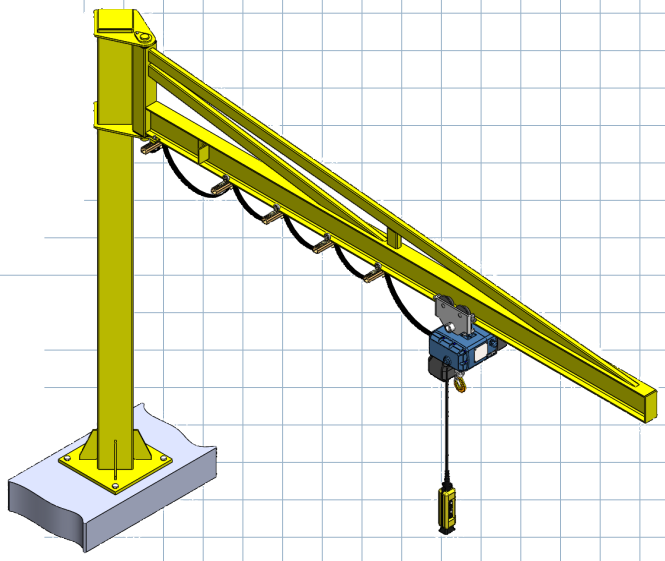

SWL [Kg]	Freestanding OB I-BEAM	Radius R [m]	Flange Width F [mm]	Kingpin Height B [mm]	Overall Height H [mm]	Height to Under Arm h [mm]	Base Size D [mm] *
80	180.0053.K30.0080	3	91	500	3000	2480	450
	180.0064.K30.0080	4	91	600	3000	2380	450
	180.0095.K30.0080	5	91	900	3000	2080	450
	180.0106.K30.0080	6	91	1000	3000	1980	600
125	180.0053.K30.0125	3	91	500	3000	2480	450
	180.0064.K30.0125	4	91	600	3000	2380	450
	180.0095.K30.0125	5	91	900	3000	2080	600
	180.0106.K30.0125	6	91	1000	3000	1980	600
250	180.0063.K30.0250	3	91	600	3000	2380	450
	180.0084.K30.0250	4	91	800	3000	2180	600
	180.0095.K30.0250	5	91	900	3000	2080	600
	180.0106.K30.0250	6	91	1000	3000	1980	700
500	180.0083.K35.0500	3	91	800	3500	2680	600
	180.0094.K35.0500	4	91	900	3500	2580	700
	180.0105.K35.0500	5	91	1000	3500	2480	700
	200.0116.K35.0500	6	100	1100	3500	2380	700
1000	180.0093.K35.1000	3	91	900	3500	2580	700
	200.0104.K35.1000	4	100	1000	3500	2480	700
	240.0115.K35.1000	5	120	1100	3500	2400	850
	270.0156.K35.1000	6	135	1500	3500	2000	850
1600**	240.0113.K35.1600	3	120	1100	3500	2400	850
	270.0144.K35.1600	4	135	1400	3500	2100	1000
	270.0155.K35.1600	5	135	1500	3500	2000	1000
2000**	270.0113.K35.2000	3	135	1100	3500	2400	1000
	270.0154.K35.2000	4	135	1500	3500	2100	1000
	270.0165.K35.2000	5	135	1600	3500	1900	1200

** Columns are available up to 5 metres upon request. Jib cranes are supplied painted*

** *Dimension may vary in case of order*

SmakHandling.com
1.844.841.2288

B. Clamp around Column Mounted Jib Cranes

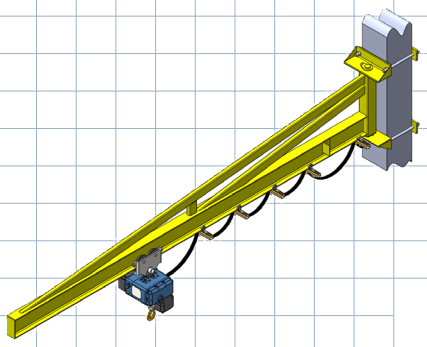

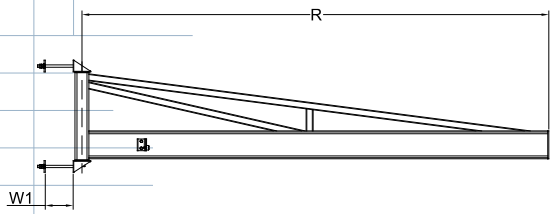

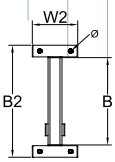

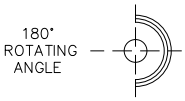

C. Wall Mounted track Jib crane

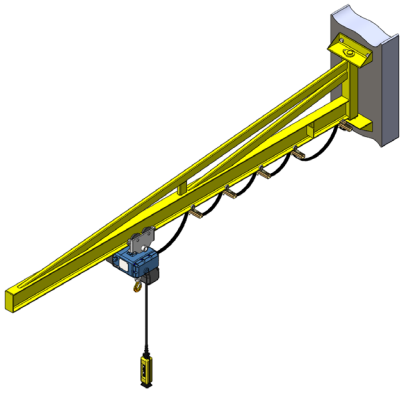

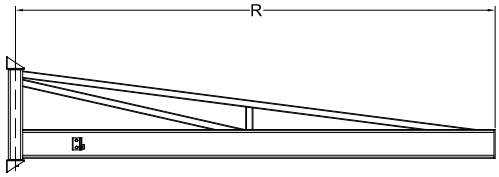

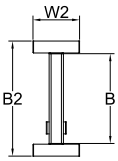

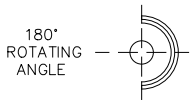

SWL [Kg]	Column Mounted	Wall Mounted	Radius R [m]	Flange Width F [mm]	Kingpin Height B [mm]	Overall Height B2 [mm]	Bracket Width W2 [mm]	Max Column Width W1 [mm]	Bolt Size Ø
80	180.0053.C.0080	180.0053.0080	3	91	500	720	380	500	M20
	180.0064.C.0080	180.0064.0080	4	91	600	820	380	500	M20
	180.0095.C.0080	180.0095.0080	5	91	900	1120	380	500	M20
	180.0106.C.0080	180.0106.0080	6	91	1000	1220	380	500	M20
125	180.0053.C.0125	180.0053.0125	3	91	500	720	380	500	M20
	180.0064.C.0125	180.0064.0125	4	91	600	820	380	500	M20
	180.0095.C.0125	180.0095.0125	5	91	900	1120	380	500	M20
	180.0106.C.0125	180.0106.0125	6	91	1000	1220	380	500	M20
250	180.0063.C.0250	180.0063.0250	3	91	600	820	380	500	M20
	180.0084.C.0250	180.0084.0250	4	91	800	1020	380	500	M20
	180.0095.C.0250	180.0095.0250	5	91	900	1120	380	500	M20
	180.0106.C.0250	180.0106.0250	6	91	1000	1220	380	500	M20
500	180.0083.C.0500	180.0083.0500	3	91	800	1020	380	500	M20
	180.0094.C.0500	180.0094.0500	4	91	900	1120	380	500	M20
	180.0105.C.0500	180.0105.0500	5	91	1000	1220	380	500	M20
	200.0116.C.0500	200.0116.0500	6	100	1100	1320	380	500	M20
1000	180.0093.C.1000	180.0093.1000	3	91	900	1120	380	500	M20
	200.0104.C.1000	200.0104.1000	4	100	1000	1220	380	500	M20
	240.0115.C.1000	240.0115.1000	5	120	1100	1430	380	500	M20
	270.0156.C.1000	270.0156.1000	6	135	1500	1830	380	500	M24
1600*	240.0113.C.1600	240.0113.1600	3	120	1100	1430	380	500	M20
	270.0144.C.1600	270.0144.1600	4	135	1400	1730	380	500	M20
	270.0155.C.1600	270.0155.1600	5	135	1500	1830	380	500	M24
	270.0166.C.1600	270.0166.1600	6	135	1600	1930	380	500	M24
2000*	270.0113.C.2000	270.0113.2000	3	135	1100	1430	380	500	M24
	270.0154.C.2000	270.0154.2000	4	135	1500	1730	380	500	M24
	270.0165.C.2000	270.0165.2000	5	135	1600	1930	380	500	M24
	300.0206.C.2000	300.0206.2000	6	150	2000	2330	380	500	M24

Jib cranes are supplied painted.

**Dimension may vary in case of order*

Ver. April 2022

SmakHandling.com
1.844.841.2288

Aluminium profle jib cranes

A. Freestanding Jib crane

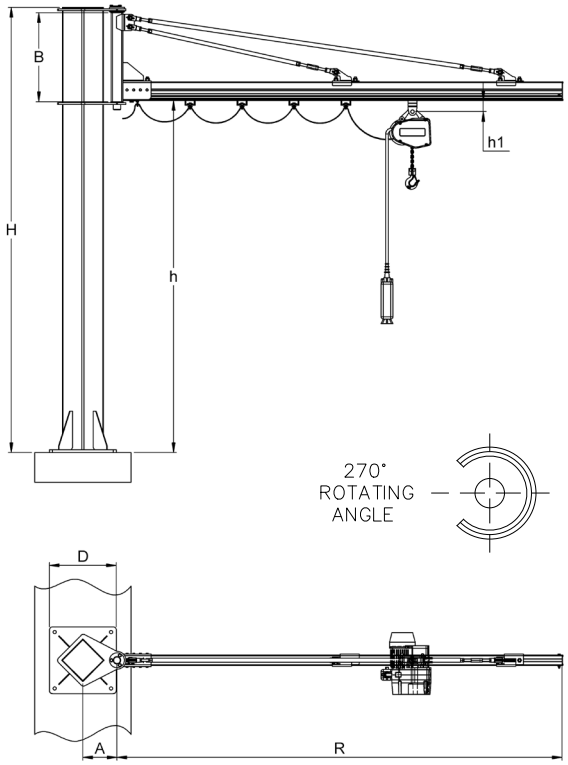

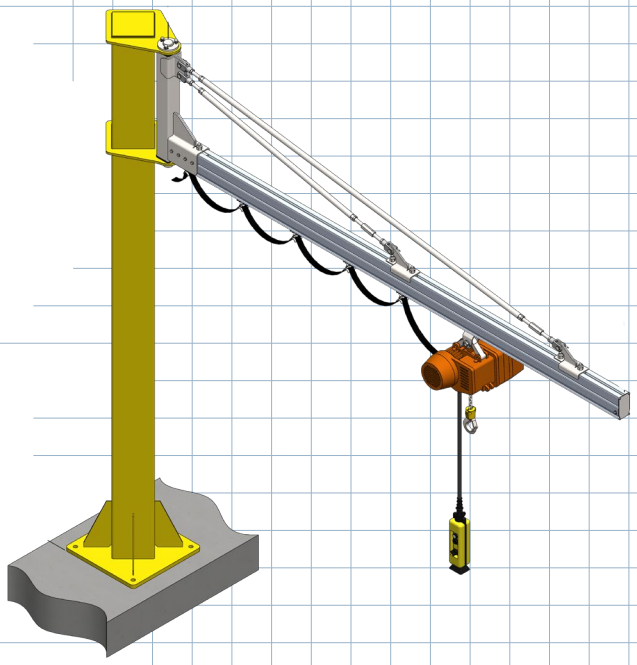

SWL [Kg]	Freestanding Alu	Radius R(m)	NIKO PROFILE	Kingpin Height B(mm)	Trolley Distance h1	Overall Height H (mm)	Height to Under Arm h(mm)	Pivot Point A(mm)	Base Size D(mm)
125	1.45.J052.K30	2	45.000	500	77	3000	2470	450	450
	1.45.J063.K30	3	45.000	600	77	3000	2370	450	450
	1.45.J074.K30	4	45.000	700	77	3000	2270	700	700
	1.45.J095.K30	5	45.000	900	77	3000	2070	600	600
	1.45.J106.K30	6	45.000	1000	77	3000	1970	600	600
250	1.45.J062.K30	2	45.000	600	77	3000	2370	450	450
	1.45.J073.K30	3	45.000	700	77	3000	2270	450	450
	1.45.J094.K30	4	45.000	900	77	3000	2070	600	600
	1.46.J095.K30	5	46.000	900	94	3000	2070	600	600
	1.46.J106.K30	6	46.000	1000	94	3000	1970	700	700
500	1.46.J072.K35	2	46.000	700	94	3500	2770	600	600
	1.46.J093.K35	3	46.000	900	94	3500	2570	600	600
	1.46.J104.K35	4	46.000	1000	94	3500	2470	700	700

Columns are supplied painted. Columns are available up to 5 meters upon request

SmakHandling.com
1.844.841.2288

B. Clamp around Column Mounted Jib Cranes

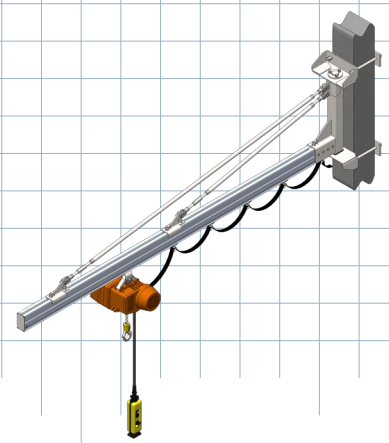

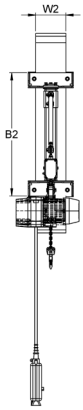

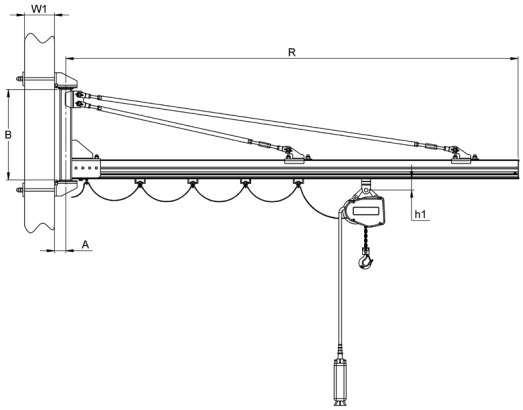

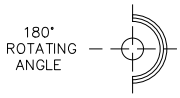

C. Wall Mounted track Jib crane

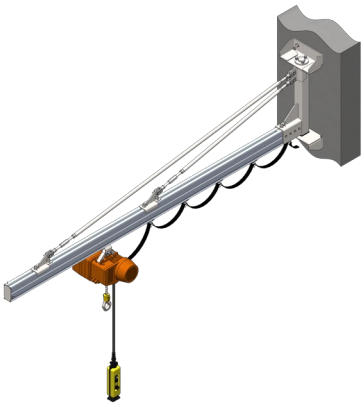

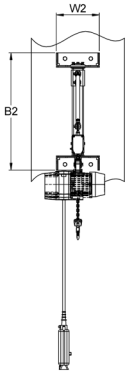

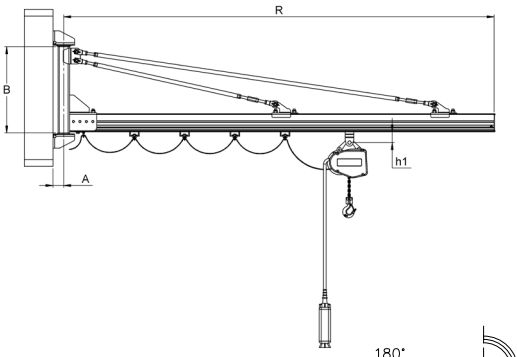

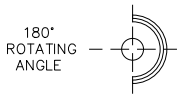

SWL [Kg]	Column Mounted Alu	Wall Mounted Alu	Radius R(m)	NIKO PROFILE	Kingping Height B(mm)	Trolley Distance h1	Overall Height B2 (mm)	Bracket Width	Max Colum Width	Pivot Point A(mm)	Ball Size
125	1.45.J052.C	1.45.J052	2	45.000	500	77	720	380	500	230	M20
	1.45.J063.C	1.45.J063	3	45.000	600	77	820	380	500	230	M20
	1.45.J074.C	1.45.J074	4	45.000	700	77	920	380	500	230	M20
	1.45.J095.C	1.45.J095	5	45.000	900	77	1120	380	500	230	M20
	1.45.J106.C	1.45.J106	6	45.000	1000	77	1220	380	500	260	M20
250	1.45.J062.C	1.45.J062	2	45.000	600	77	820	380	500	230	M20
	1.45.J073.C	1.45.J073	3	45.000	700	77	920	380	500	230	M20
	1.45.J094.C	1.45.J094	4	45.000	900	77	1120	380	500	260	M20
	1.46.J095.C	1.46.J095	5	46.000	900	94	1120	380	500	260	M20
	1.46.J106.C	1.46.J106	6	46.000	1000	94	1220	380	500	260	M20
500	1.46.J072.C	1.46.J072	2	46.000	700	94	920	380	500	260	M20
	1.46.J093.C	1.46.J093	3	46.000	900	94	1120	380	500	260	M20
	1.46.J104.C	1.46.J104	4	46.000	1000	94	1220	380	500	260	M20

Jib cranes are supplied painted.

Ver. April 2022

SmakHandling.com
1.844.841.2288

Special applications of Jib cranes

We can provide other types of jib cranes including articulated jib cranes, under-braced NIKO track profile, telescopic arms or ceiling mounted Jib Cranes. These are normally bespoke fabrications designed to meet very specific non-standard requirements.

Articulated Jib cranes

In articulated jib cranes, the arm is made in 2 sections. The 2 arm sections pivot at the joint and therefore allow the arm to cover an almost complete 360° slewing arc.

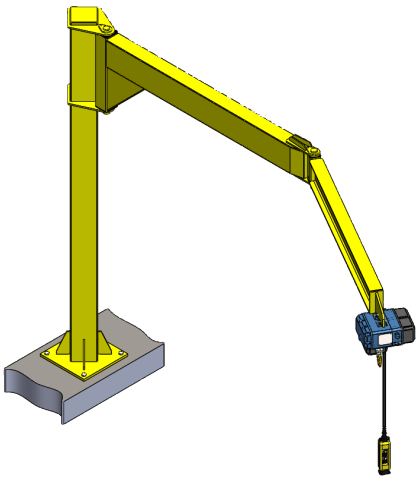

Free standing
articulated Jib crane

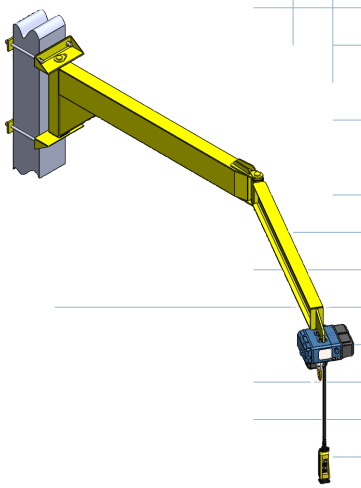

Clamp around Column Mounted
articulated Jib Cranes

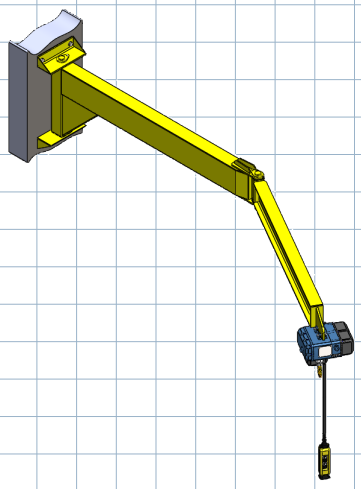

Wall mounted
articulated Jib crane

Ceiling Jib Cranes

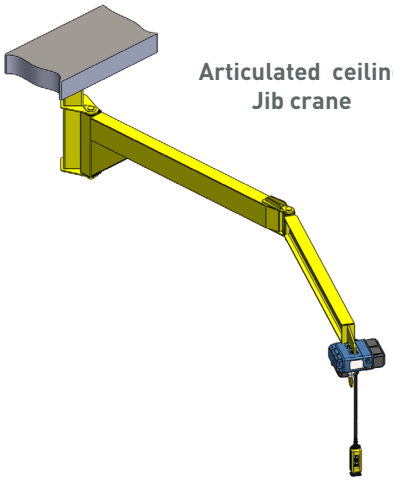

Articulated ceiling
Jib crane

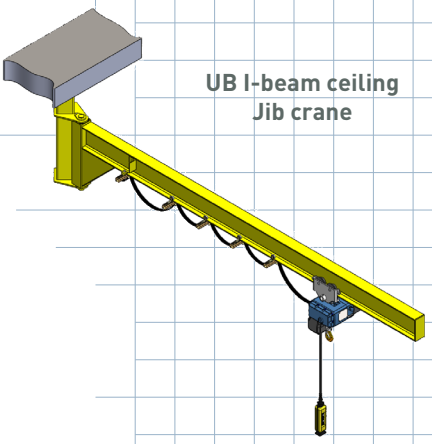

UB I-beam ceiling
Jib crane

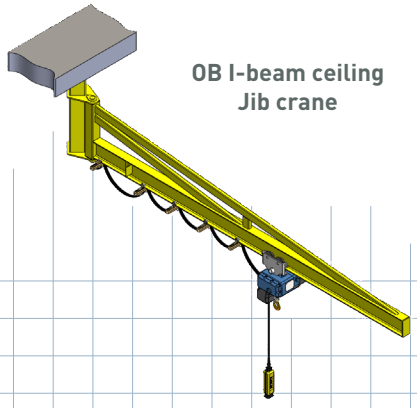

OB I-beam ceiling
Jib crane

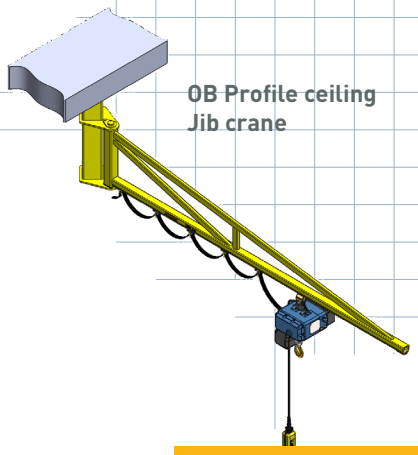

OB Profile ceiling
Jib crane

SmakHandling.com
1.844.841.2288

Additional components for I-Beam jib cranes

NIKO trolleys for hoists, cable trolleys and cable end clamps for all types of I-beam jib cranes.

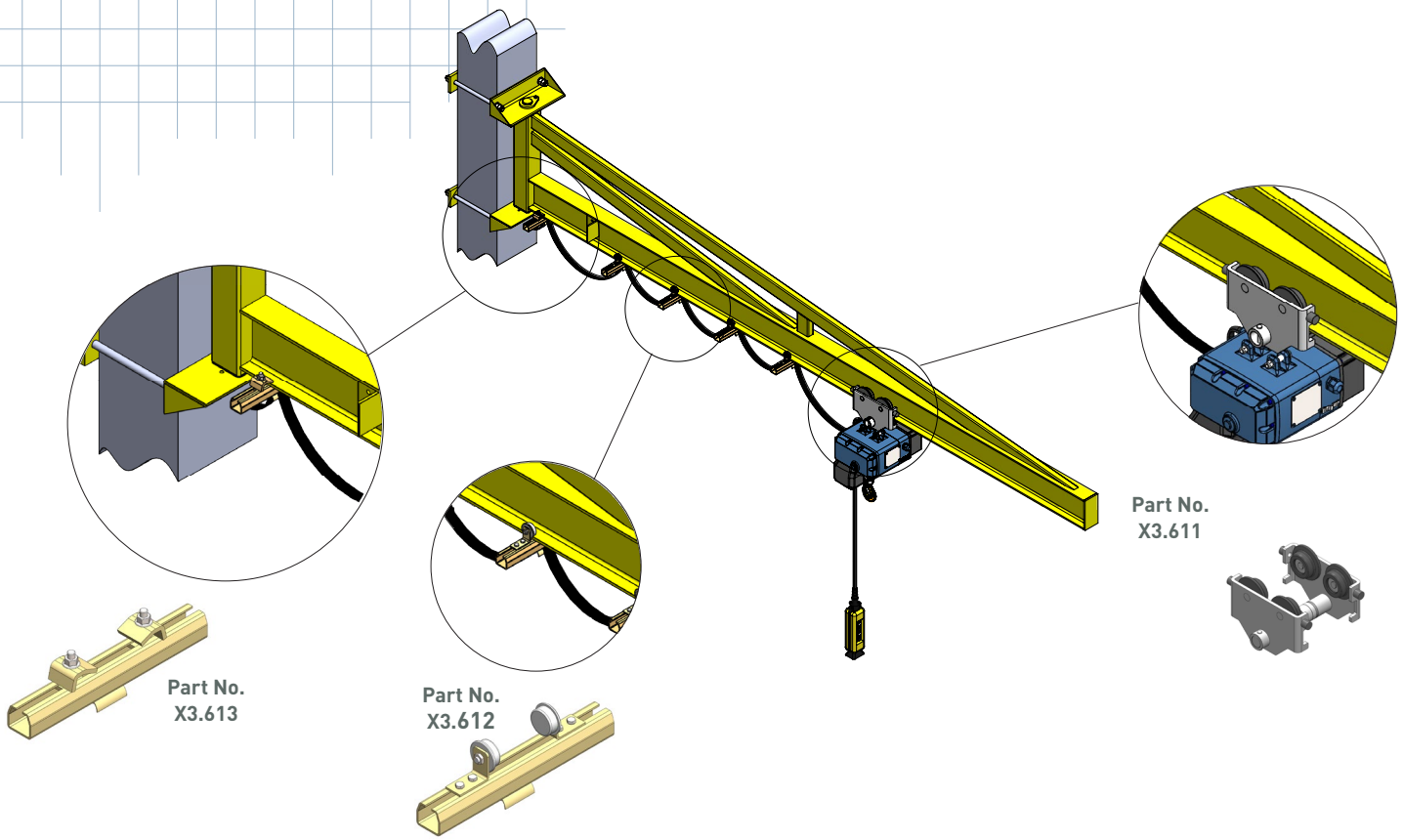

Slewing limit for jib cranes

The slewing limit restricts the rotation of the arm for such angles as to prevent the impact of the load at fixed points and contribute in safier workspace.

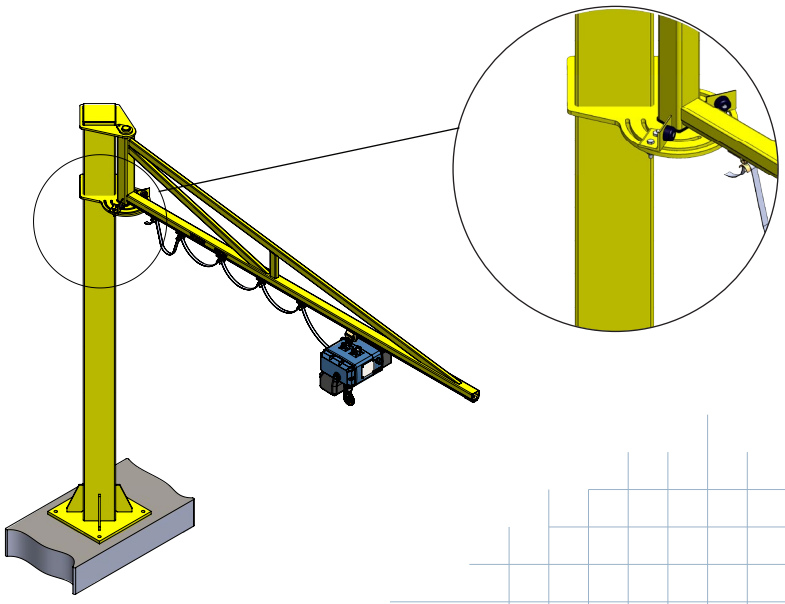

Ver. April 2022

SmakHandling.com
1.844.841.2288

Notes

SmakHandling.com
1.844.841.2288

Application Photos

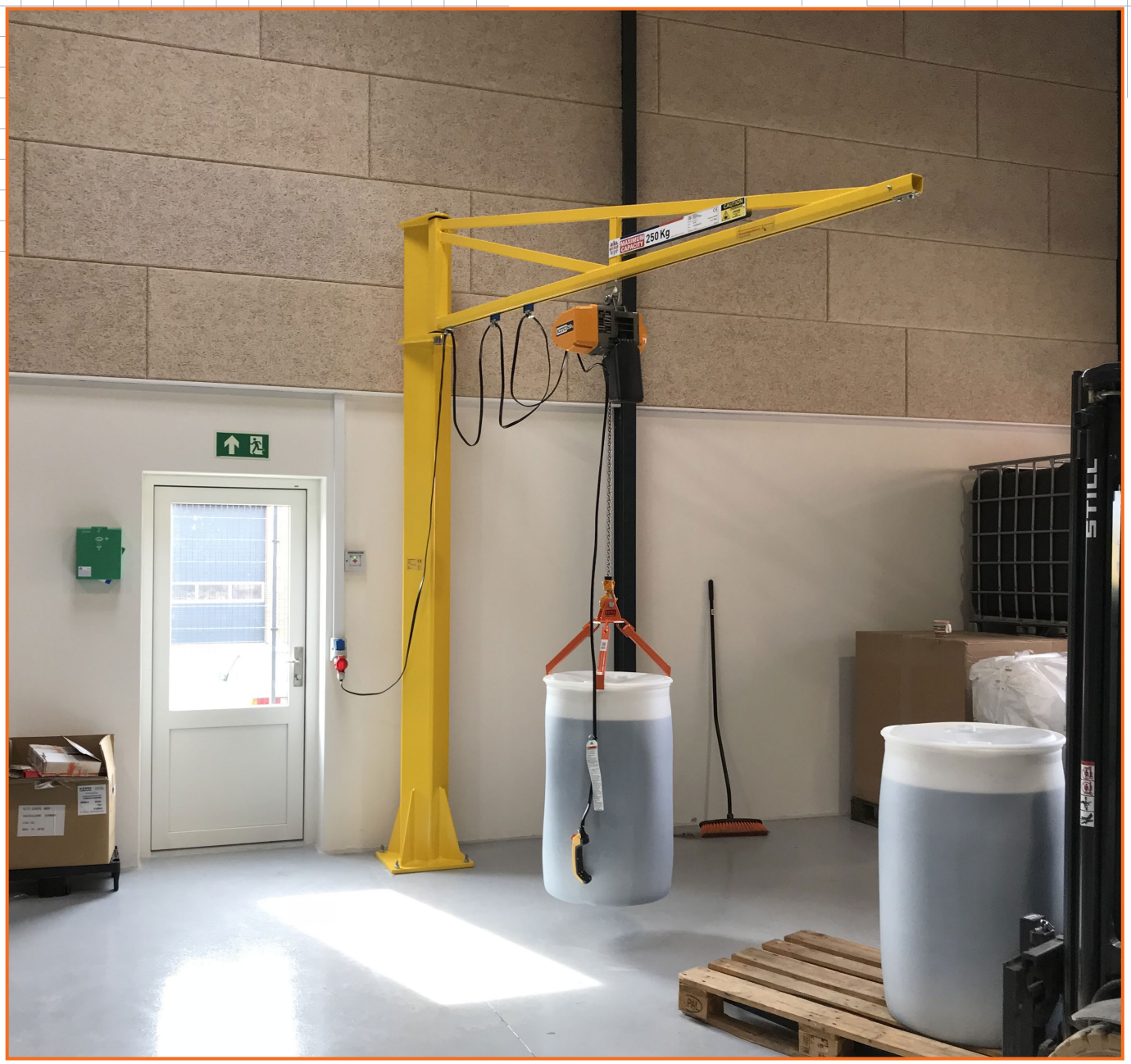





SmakHandling.com
1.844.841.2288

Application Photos











SmakHandling.com
1.844.841.2288

AUSTRIA-NIKO Vertriebs GmbH
Hainfelder Straße 48
A - 2560 Berndorf
Tel. 0043 2672-21201
Fax 0043 2672-21201-13
office.at@niko.eu.com
www.niko.world

CHINA-NIKO TRADING (SHANGHAI) Co., Ltd
Room 901-156, No.18 TianShan Road,
ChangNing District, Shanghai,
P.R.China
Tel. 0086 158 0064 7160
info.cn@niko.eu.com

GERMANY-NIKO Technik GmbH
Robert-Bosch-Str. 14
DE – 42489 Wülfrath
Tel. 0049 (0) 2058 9093603
Fax 0049 (0) 2058 9093604
office.de@niko.eu.com

GREECE-Helm Hellas S.A.
82nd Km Athens-Korinthos
P.O. Box 209
GR - 201 00 KORINTHOS
Tel. 0030 27410 76800
Fax 0030 27410 25368
info@niko.eu.com

POLAND- NIKO Polska
Wojska Polskiego 65A
PL - Wielun 98-300
Tel. 0043 2672-21201
info.pl@niko.eu.com

UNITED KINGDOM-NIKO Ltd
Airfield Park Business Park
Welsh Road East, Southam
Warwickshire, CV47 1NE
Tel. 0044 (0) 1926 813111
Fax 0044 (0) 1926 815599
Sales@niko.co.uk
www.niko.co.uk

USA-NIKO Track
210 Century Drive
Bristol, CT 06010
Tel. 001 860-845-8179
Fax 001 860-584-8612
info@nikotrack.com
www.nikotrack.com

CANADA - NIKO Crane Canada
615, rue du Nickel
Québec (Québec) G2N 0J9
Tel. 418 841.2287
info@smakdesign.ca
www.smakmanutention.com

USA Light Crane Systems- NIKORAIL
8000 Joliet Rd.
McCook, IL 60525
Toll Free 888.352.1213
Tel. 001 708-352-1213
sales@hsicrane.com
www.nikorail.com

www.niko.world
www.niko.eu.com
www.niko.co.uk
www.nikotrack.com

smak
Industrial Handling Solutions
SmakHandling.com
1.844.841.2288

Complete **NIKO** product range:

- LIGHT DUTY SLIDING DOOR HARDWARE
- HEAVY DUTY SLIDING DOOR HARDWARE
- CONVEYOR SYSTEMS
- LIGHT CRANES
- CABLE TROLLEYS, FESTOON SYSTEMS & CONDUCTOR BARS
- PERSONAL FALL ARREST SYSTEMS (EN 795)
- ACCESSORIES FOR GATES AND DOORS

Copyright NIKO (Ver. April 2022)
We take no obligation for layout, composition, technical modifications as well as misprints.